Polo Estate 1998 ➤

Simos injection and ignition system									
Engine ID	AEH	AKL							

Edition 12.1999

Protected by copyright. Copying for private or commercial purposes, in part or in whole, is not permitted unless authorised by Volkswagen AG. Volkswagen AG does not guarantee or accept any liability with respect to the correctness of information in this document. Copyright by Volkswagen AG.

satelettronica

List of Workshop Manual Repair GroupsList of Workshop Manual Repair GroupsList of Workshop Manual Repair Groups

Polo Estate 1998 ➤

Simos injection and ignition system

Repair Group

01 - Self-diagnosis

24 - Mixture preparation, Injection

28 - Ignition system

Protected by copyright. Copying for private or commercial purposes, in part or in whole, is not permitted unless authorised by Volkswagen AG. Volkswagen AG does not guarantee or accept any liability with respect to the correctness of information in this document. Copyright by Volkswagen AG.

satelettronica

Technical information should always be available to the foremen and mechanics, because their careful and constant adherence to the instructions is essential to ensure vehicle road-worthiness and safety. In addition, the normal basic safety precautions for working on motor vehicles must, as a matter of course, be observed.

All rights reserved.
No reproduction without prior agreement from publisher.

Copyright © 2011 Volkswagen AG, Wolfsburg

00056408320

Contents

01 - Self-diagnosis . . . 1

1 General to self-diagnosis . . . 1
1.1 General to self-diagnosis . . . 1
1.2 Features of self-diagnosis . . . 1
1.3 Technical data of self-diagnosis . . . 1
1.4 Connecting fault reader V.A.G 1551 and selecting engine control unit . . . 2
1.5 Connecting vehicle diagnosis, testing and information system VAS 5051 and selecting engine control unit . . . 5

2 Fault memory . . . 7
2.1 Fault memory . . . 7
2.2 Automatic test sequence for interrogating all fault memories . . . 8
2.3 Interrogating and erasing engine control unit fault memory . . . 9

3 Fault table . . . 10
3.1 Fault table . . . 10

4 Final control diagnosis . . . 16
4.1 Final control diagnosis . . . 16
4.2 Performing final control diagnosis . . . 16

5 Measured value blocks . . . 21
5.1 Measured value blocks . . . 21
5.2 Safety precautions . . . 21
5.3 Read measured value block . . . 21

6 Evaluating measured value blocks, display groups 0...5 -Basic functions- . . . 23
6.1 Evaluating measured value blocks, display groups 0...5 -Basic functions- . . . 23

7 Evaluating measured value blocks, display groups 6...9 -Engine speed regulation- . . . 27
7.1 Evaluating measured value blocks, display groups 6...9 -Engine speed regulation- . . . 27

8 Evaluating measured value blocks, display groups 10...12 -Lambda regulation- . . . 28
8.1 Evaluating measured value blocks, display groups 10...12 -Lambda regulation- . . . 28

9 Evaluating measured value blocks, display groups 13...18 -Ignition- . . . 31
9.1 Evaluating measured value blocks, display groups 13...18 -Ignition- . . . 31

10 Evaluating measured value blocks, display groups 19...99 -Operating condition- . . . 34
10.1 Evaluating measured value blocks, display groups 19...99 -Operating condition- . . . 34

24 - Mixture preparation, Injection . . . 39

1 Servicing injection system . . . 39
1.1 Servicing injection system . . . 39
1.2 Fitting locations overview . . . 39
1.3 General notes on injection . . . 43
1.4 Removing and installing parts of the injection system . . . 44
1.5 Dismantling and assembling intake manifold - Upper part . . . 51
1.6 Dismantling and assembling fuel rail with injectors . . . 54
1.7 Dismantling and assembling air cleaner . . . 57
1.8 Safety precautions . . . 59
1.9 Rules for cleanliness . . . 59
1.10 Technical data . . . 59

2 Checking components . . . 60
2.1 Checking components . . . 60
2.2 Checking Lambda probe heating . . . 60
2.3 Checking air mass meter . . . 63
2.4 Checking throttle valve control part . . . 65
2.5 Checking coolant temperature sender . . . 73
2.6 Checking intake air temperature sender . . . 77
2.7 Checking engine speed sender . . . 81

Protected by copyright. Copying for private or commercial purposes, in part or in whole, is not permitted unless authorised by Volkswagen AG. Volkswagen AG does not guarantee or accept any liability with respect to the correctness of information in this document. Copyright by Volkswagen AG.
satelettronica

2.8 Checking injectors 83
2.9 Checking fuel pressure regulator and holding pressure 89
2.10 Checking intake air system for leaks (unmetered air) 92

3 Checking functions 93
3.1 Checking functions 93
3.2 Idling check 93
3.3 Checking Lambda probe and Lambda regulation 95
3.4 Checking engine operating mode 98
3.5 Checking intake manifold change-over 100

4 Engine control unit 102
4.1 Engine control unit 102
4.2 Function 102
4.3 Checking control unit voltage supply 102
4.4 Replacing engine control unit 104
4.5 Coding engine control unit 105
4.6 Coding variations of engine control unit 106
4.7 Adapting engine control unit to throttle valve control part 106

5 Checking additional signals 108
5.1 Checking additional signals 108
5.2 Testing speed signal 108
5.3 Checking engine speed signal 110
5.4 Checking signal from/to air conditioning system 111
5.5 Checking driving range signal 115
5.6 Checking signal from power steering pressure switch 117
5.7 Checking signal from clutch pedal switch 119

28 - Ignition system 123

1 Servicing ignition system 123
1.1 Servicing ignition system 123
1.2 General notes on ignition system 123
1.3 Removing and installing parts of the ignition system 124
1.4 Safety precautions 127
1.5 Test data, spark plugs 128
1.6 Checking Hall sender 128
1.7 Checking ignition transformer 130
1.8 Checking knock sensor 134

Protected by copyright. Copyright by Volkswagen AG.
This document is made available by Volkswagen AG. Volkswagen AG does not guarantee or accept any liability with respect to the correctness of information in this document unless authorised by Volkswagen AG.
satelettronica

01 - Self-diagnosis

1 - General to self-diagnosis

1.1 - General to self-diagnosis

1.2 - Features of self-diagnosis

The Simos control unit (J361) for the fuel injection and ignition system is equipped with a fault memory.

If faults occur in the sensors and components being monitored, they will be stored in the fault memory together with an indication of the type of fault.

After evaluating the information, the engine control unit decides among the different fault numbers font=symbol charset=fontspecific code=225 descr='[lang]'=> Fault table beginning page 10) and stores these until the contents of the fault memory is erased.

Faults which only occur sporadically will have the addendum "sporadic fault" on the print out. These faults will be indicated on the display by the addendum "/SP". The cause of sporadic faults can be e.g. a loose contact or a brief open circuit. If a sporadic fault does not occur again within 40 engine starts, it will be erased from the fault memory.

The faults stored can be read-out with the fault reader V.A.G 1551, the vehicle system tester V.A.G 1552 or the new tester VAS 5051 => Page 9 .

The fault memory must be erased after the faults have been rectified => Page 9 .

Note:

General information for self-diagnosis can be found in the instruction manuals for the fault reader V.A.G 1551, vehicle system tester V.A.G 1552 or the new tester VAS 5051.

1.3 - Technical data of self-diagnosis

Control unit identification

The control unit version is displayed when the fault reader V.A.G 1551, the vehicle system tester V.A.G 1552 or the new tester VAS 5051 is connected and engine electronics control unit selected => Page 2 .

Equipment

Engine code	AEH	AKL
System designation	SIMOS 2.1	SIMOS 2.1
Exhaust emissions fulfil	MVEG II Standard	D3 standard
EPC system	no	no
Self-diagnosis	yes	yes
Final control diagnosis	yes	yes
Operating mode of data transfer to V.A.G 1551/1552	Rapid data transfer	Rapid data transfer
Fault memory	Non-volatile memory1)	Non-volatile memory1)
Learnt value memory	Volatile memory2)	Volatile memory2)

satelettronica

Lambda regulation	1 probe	1 probe
Knock control	1 knock sensor	1 knock sensor
Variable intake manifold	yes	yes
Secondary air system	no	no
Exhaust gas recirculation	no	no
Variable valve timing	no	no

1) Independent of voltage supply.

Functions which can be selected when using the fault readers V.A.G 1551/1552 or VAS 5051

Note:

The prerequisites to select the desired functions can be found in the following table.

Function		Prerequisite		
Functions on fault reader V.A.G 1551 or on system tester V.A.G 1552		Engine stopped, ignition switched on	Engine running at idling speed	Vehicle being driven
01	Interrogate control unit version	yes	yes	yes
02	Interrogate fault memory	yes1)	yes	yes
03	Final control diagnosis	yes	no	no
04	Basic setting2)	yes	no	no
05	Erase fault memory	yes1)	yes	yes
06	End output	yes	yes	yes
07	Code control unit	yes	no	no
08	Read measured value block	yes	yes	yes
10	Adapting	yes	no	no

1) Only carry out with ignition switched on, when engine does not start (operate starter for at least 5 seconds first).

2) Must be carried out after performing the following work: Replacing engine control unit, throttle valve control part or engine.

1.4 - Connecting fault reader V.A.G 1551 and selecting engine control unit

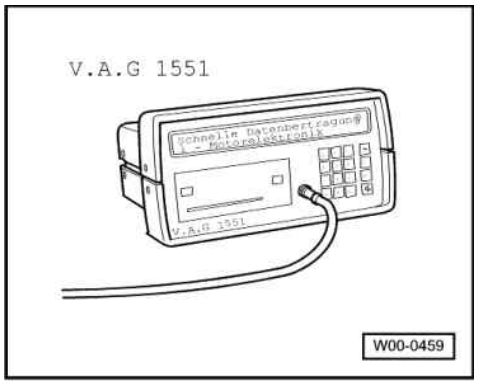

Protected copyright. Copying for private or commercial purposes, in part or in whole, is not permitted unless authorised by Volkswagen AG. Volkswagen AG does not guarantee or accept any liability with respect to the correctness of information in this document. Copyright by Volkswagen AG.

satelettronica

Special tools, workshop equipment, testers, measuring instruments and auxiliary items required

- V.A.G 1551 Fault reader

Notes:

- The vehicle system tester V.A.G 1552 can be used instead of the fault reader V.A.G 1551, however a print-out is not possible.
- All functions of V.A.G 1551/1552 can also be carried out with the new tester VAS 5051. Connecting VAS 5051 => Page 5 .

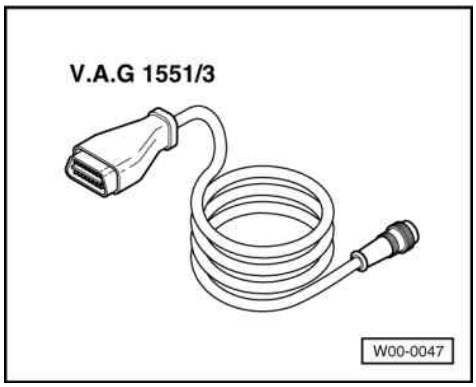

- V.A.G 1551/3 Cable

Test conditions

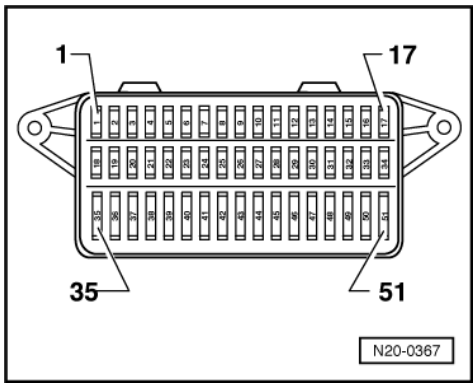

- -> The fuses 1, 3, 31, 34, 36 and 40 must be OK.
- Earth connection in plenum chamber OK.
- The battery voltage must be at least 11.5 V.
- All electrical consumers, e.g. lights and rear window heating must be switched off.
- On vehicles with an automatic gearbox the selector lever must be in P or N.
- If the vehicle is equipped with an air conditioner, this must be switched off.

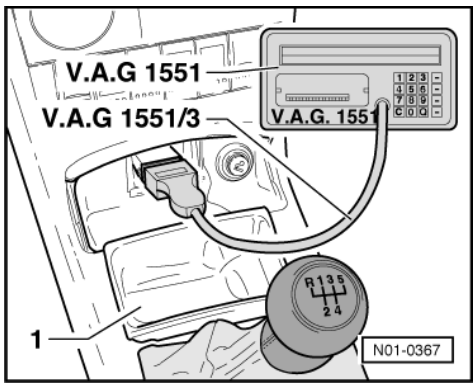

Protected by copyright. Copying for private or commercial purposes, in part or in whole, is not permitted unless authorised by Volkswagen AG. Volkswagen AG does not guarantee or accept any liability with respect to the correctness of information in this document. Copyright by Volkswagen AG.
satelittonica

Work sequence

- -> Remove ash tray -1-.
- Connect fault reader V.A.G 1551 with cable V.A.G 1551/3.

After the fault reader has been connected:

- Depending upon desired function:
  Switch ignition on
  or
  Start engine => Page 2 , Table "Selectable functions".

Notes:

- If the display remains blank, check voltage supply for diagnostic connection:

=> Current flow diagrams, Electrical fault finding and Fitting locations

- If the display does not indicate as described in the work sequence:

=> Fault reader operating instructions

- If due to an input fault "Fault in the data transfer!" is displayed, pull wire off fault reader, reconnect and repeat work step.

- Operate fault reader taking into account the information on the display:

-> Indicated on display:

```
V.A.G - SELF DIAGNOSIS      HELP
     1 - Rapid data transfer*
     2 - Flash code output*
```

* Appears alternately

- Operate fault reader taking into account the information on the display:
- Press key 1 for "Rapid data transfer".
- Press keys 0 and 1 for address word "Engine electronics" and confirm entry with Q key.

-> The control unit identification and coding are indicated on the display, e.g.:

```
6K0906019 1.6 ltr. R4/2V SIMOS ATS073
Coding 10003     WSC XXXXX
```

- 6K0 906 019 =Part No. of the control unit (for current control unit versions, see parts catalogue)
- 1.6 ltr. = Engine displacement
- R4/2V = Engine configuration (4-Cyl. in-line engine, 2 valve)
- SIMOS = System designation
- HS = Manual gearbox (hand change)
  AT = Automatic gearbox
- S073 = Programme version number
- Coding 10003= Control unit coding, coding variants of engine control unit => Page 106
- WSC xxxxx = Workshop code from V.A.G 1551, of the workshop which carried out the last coding. (If the factory coding has not been changed, WSC 00000 appears)

Notes:

- Replace control unit if the control unit version displayed does not correspond to the vehicle => Page 104 .
- Check to see if the correct coding has been used if there are driving characteristic problems/malfunctions => Page 106 .

- Press ⇒key.

-> Indicated on display:

satelettronica

```
Rapid data transfer      HELP
Select function XX
```

- Further measures see repair procedures.

1.5 - Connecting vehicle diagnosis, testing and information system VAS 5051 and selecting engine control unit

All functions which could be done with V.A.G 1551/1552 can also be done with the new tester VAS 5051 in the operating mode: "vehicle self-diagnosis":

=> Operating instructions for Vehicle Diagnosis, Testing and Information System VAS 5051.

Special tools, workshop equipment, testers, measuring instruments and auxiliary items required

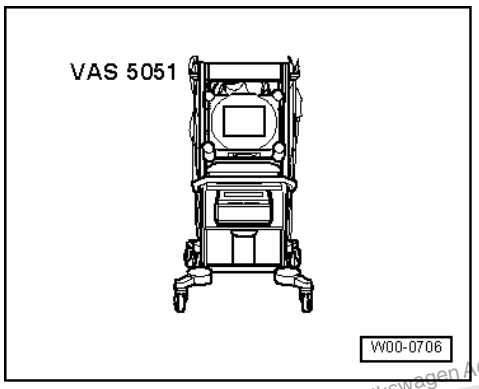

- VAS 5051 Vehicle Diagnosis, Testing and Information System

Test conditions

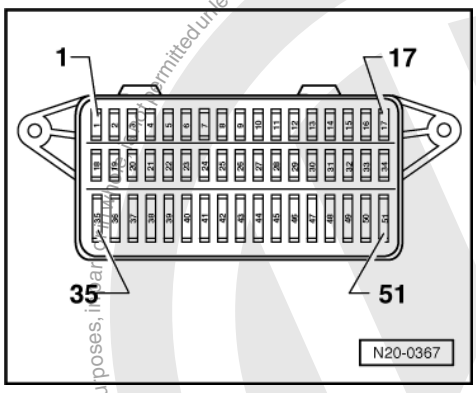

- -> The fuses 1, 3, 31, 34, 36 and 40 must be OK.
- Earth connection in plenum chamber OK.
- The battery voltage must be at least 11.5 V.
- All electrical consumers, e.g. lights and rear window heating must be switched off.
- On vehicles with an automatic gearbox the selector lever must be in P or N.
- If the vehicle is equipped with an air conditioner, this must be switched off.

Protected by copyright. Copying for private or commercial purposes, in part or in whole, is not permitted unless authorised by Volkswagen AG. Volkswagen AG does not guarantee or accept any liability with respect to the correctness of information in this document. Copyright by Volkswagen AG.
satelettronica

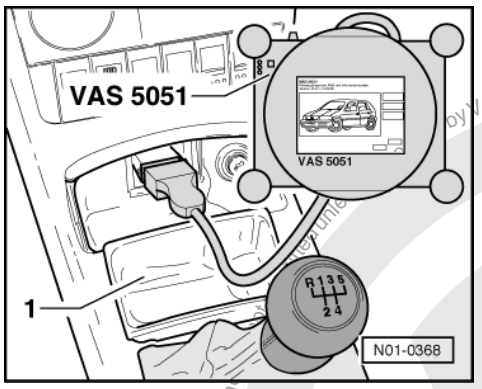

Work sequence

- Connect the tester VAS 5051 using diagnostic cable VAS 5051/1 or VAS 5051/3 as follows:
- -> Remove ash tray -1-.
- Fit diagnosis cable connector onto diagnosis connector.

- Depending upon desired function:
  Switch ignition on
  or
  Start engine => Page 2 , Table "Selectable functions".

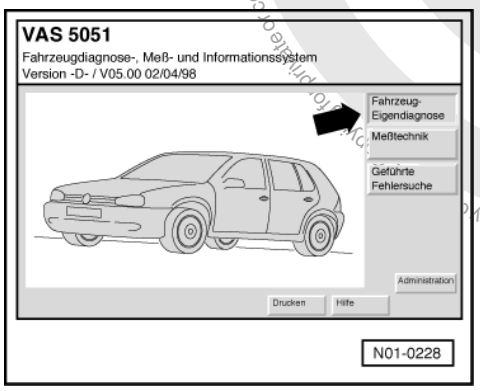

Notes:

- In the functions 04 - Basic setting/08 - Read data block, the display zones will be listed from top to bottom.
- If the display does not indicate as described in the work sequence:

=> Operating instructions for Vehicle Diagnosis, Testing and Information System VAS 5051.

-> Indicated on display:

Select operating mode:

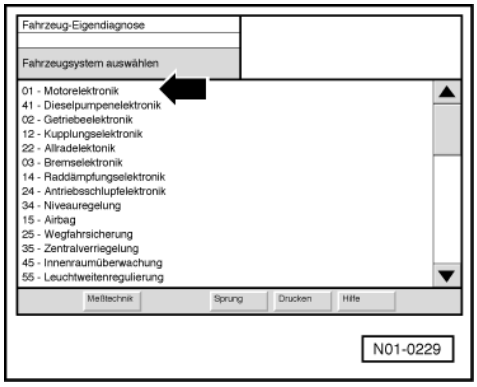

Protected by Volkswagen AG. Volkswagen AG does not guarantee or accept any liability with respect to the correctness of information in this document. Copyright by Volkswagen AG.
satelettronica

- Press the button on the display for "Vehicle self-diagnosis" -arrow-.

-> Indicated on display:

Select vehicle system:

- Press keys "01 - Engine electronics" on the display -arrow-.

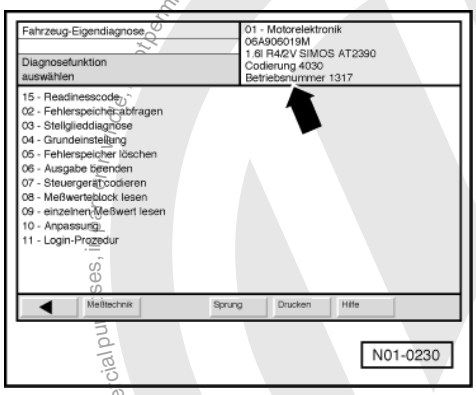

-> On the display the control unit identification and coding are displayed, e.g.:

If the coding differs from the vehicle version, then:

- Checking control unit coding => Page 106 ,
  coding variations for engine control unit.

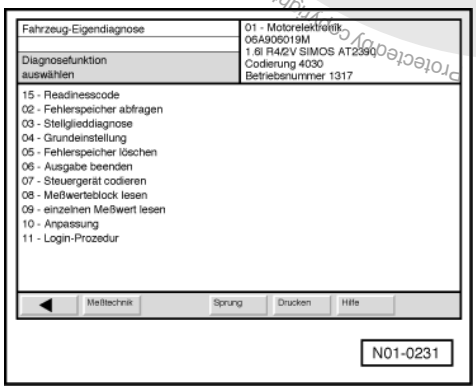

-> Indicated on display:

Select diagnostic function:

At this point all diagnostic functions are available.

- Press the desired function on the display.
- Further measures see repair procedures.

2 - Fault memory

2.1 - Fault memory

Interrogate and erase engine control unit fault memory=> Page 9 .

Protected by Copyright. Copying for private or commercial purposes, in part or in whole, is not permitted unless authorised by Volkswagen AG. Volkswagen AG does not guarantee or accept any liability with respect to the correctness of information in this document. Copyright by Volkswagen AG.
satelettronica

2.2 - Automatic test sequence for interrogating all fault memories

Special tools, workshop equipment, testers, measuring instruments and auxiliary items required

- Fault reader V.A.G 1551 (or vehicle system tester V.A.G 1552) with cable V.A.G 1551/3

Work sequence

Note:

All functions which could previously be performed with V.A.G 1551/1552 can also be performed with the new tester VAS 5051.

The various control units/components are connected together via a data bus. This is why it is always sensible to interrogate the fault memory of all control units first with the "automatic test sequence".

During test and assembly work faults can be recognised from other control units like e.g. plug disconnected. Therefore on completion the fault memories of all control units must be interrogated and erased. To do this:

- Press key 0 twice for address word "Automatic test sequence" and confirm entry with Q key. The V.A.G 1551 transmits all known address words one after the other.

When a control unit answers with its identification the number of stored faults appears on the display or "No fault recognised".

Any system faults that are stored will be displayed one after the other and printed out. The V.A.G 1551 will then transmit the next address word.

-> The automatic test sequence has ended when the following appears on the display:

```
V.A.G - SELF-DIAGNOSIS      HELP
1 - Rapid data transfer*
2 - Flash code output*
```

- Erase all fault memories and then carry out a road test.

Observe the valid safety measures during a test drive => Page 21 .

During the road test the following operating conditions must be fulfilled:
- The coolant temperature must exceed 80 °C .

- When the temperature is reached, the operating conditions
  - Idling
  - Part throttle
  - Enrichment
  - Full throttle
  - Overrun

  must be attained several times.
- At full throttle the speed must exceed 3500 rpm.

Again interrogate the fault memories of all control units using the "automatic test sequence".

If no fault is stored:

- Press the ⇒key.

-> Indicated on display:

```
Rapid data transfer      HELP
Select function XX
```

- Press keys 0 and 6 for the function "End output" and confirm entry with the Q key.
- Switch off ignition.

Protected by copyright. Copying for private or commercial purposes, in part or in whole, is not permitted unless authorised by Volkswagen AG. Volkswagen AG does not guarantee or accept any liability with respect to the correctness of information in this document. Copyright by Volkswagen AG.
satelettronica

2.3 - Interrogating and erasing engine control unit fault memory

Special tools, workshop equipment, testers, measuring instruments and auxiliary items required

- Fault reader V.A.G 1551 (or vehicle system tester V.A.G 1552) with cable V.A.G 1551/3

Work sequence

Note:

All functions which could previously be performed with V.A.G 1551/1552 can also be performed with the new tester VAS 5051.

- Connect fault reader V.A.G 1551 (V.A.G 1552). Start engine and select "Address word" 01 of engine control unit. When doing this the engine must be running at idling speed.
  (Connecting fault reader and selecting engine control unit => Page 2.)

Only when engine does not start:

- Operate the starter for at least 5 seconds. Then do not switch the ignition off.

- Switch on fault reader printer with the print key. The warning lamp in key must light up.

-> Indicated on display:

```
Rapid data transfer      HELP
Select function XX
```

- Operate fault reader taking into account the information on the display:
- Press keys 0 and 2 for function "Interrogate fault memory" and confirm entry with Q key.

-> The number of faults stored or "No fault recognised!" will be shown on the display.

```
X Faults recognised!
```

If no fault is stored:

- Press ⇒key.

If one or more faults are stored:

The stored faults will be displayed and printed out one after the other.

-> After the stored faults have been printed out, the display will show:

```
Rapid data transfer      HELP
Select function XX
```

- Press keys 0 and 5 for the function "Erase fault memory" and confirm entry with Q key.

-> Indicated on display:

```
Rapid data transfer
Fault memory is erased!
```

Note:

If the ignition is switched off between "Interrogate fault memory" and "Erase fault memory" the fault memory will not be erased.

- Press ⇒key.

-> Indicated on display:

```
Rapid data transfer      HELP
Select function XX
```

Copyright by Volkswagen AG. Volkswagen AG does not guarantee or accept any liability with respect to the correctness of information in this document. Copying for private or commercial purposes, in part or in whole, is not permitted unless authorised by Volkswagen AG. Copyright by Volkswagen AG
satelettronica

- Press keys 0 and 6 for the function "End output" and confirm entry with the Q key.
- Switch off ignition.
- Eliminate the faults printed out using the fault table:
  Fault table =>Page 10 .

3 - Fault table

3.1 - Fault table

Notes:

- The fault table is ordered according to the 5-digit fault code.
- Explanation of the fault types (e.g. "open circuit/short circuit to earth"):

=> Fault reader operating instructions

- If components are indicated as faulty:
  First check the wiring and connectors to these components as well as the system earth connections according to current flow diagram. This is particularly relevant if faults are output as "occurring sporadically" (SP).
- Erase fault memory after rectifying fault =>Page 9 .

V.A.G 1551 print out, e.g.:

00523 030

Intake air temperature sender -G42

Short to earth

Sporadic fault

Explanation:

- 00523 = Fault code
- 030 = Fault type as number
- Intake air temperature sender -G42 = Faulty current path or incorrect location
- Open circuit/short to positive = Fault type as text
- Sporadic faults = Faults that are not always present e.g. loose contact

Fault code	Fault text	Fault elimination
00282	Throttle valve positioner -V601) Short	- Check throttle valve positioner => Page 65 , Checking throttle valve control part
	Throttle valve positioner -V601) Blocked or no voltage	
	Throttle valve positioner -V601) Connector	
	Throttle valve positioner -V601) Upper stop value	
	Throttle valve positioner -V601) Signal outside tolerance	
	Throttle valve positioner -V601) Implausible signal	
	Throttle valve positioner -V601) Regulating difference	

1) The throttle valve positioner (V60) is a component of the throttle valve control part (J338).

Protected by copyright. Copyright by Volkswagen AG. Volkswagen AG does not guarantee or accept any liability with respect to the correctness of information in this document. Copying for private or commercial purposes, in part or in whole, is not permitted unless authorised by Volkswagen AG.
satelettronica

Fault code	Fault text	Fault elimination
00305	Fuel consumption indicator signal Short to positive	- Check fuel consumption indicator signal: => Current flow diagram, Electrical fault finding and Fitting locations
00513	Engine speed sender -G28 No signal	- Check engine speed sender =>Page 81
	Engine speed sender -G28 Implausible signal	
00515	Hall sender -G40 No signal	- Check Hall sender =>Page 128
	Hall sender -G40 Implausible signal	- Check engine timing and adjust if necessary: => Repair group 13; Dismantling and assembling engine; Removing, installing and tensioning toothed belt Removing, installing and tensioning toothed belt

Note on fault code 00513:

- Metal particles can cause additional signals to be generated.
- Signals may not be generated or be too small and therefore not recognised if the sender gap to sender wheel is too large or the sender wheel is damaged.
- The signals can be irregular if the sender wheel is loose.

Fault code	Fault text	Fault elimination
00516	Idling switch-F601) Open circuit/short to positive	- Check idling switch => Page 65 , Checking throttle valve control part
	Idling switch-F601) Short to earth	- Adjust accelerator cable: => Repair group 20; Accelerator mechanism; Adjusting accelerator cable Adjusting accelerator cable
00518	Throttle valve potentiometer -G692) Open circuit/short to positive	- Check throttle valve potentiometer => Page 65 , Checking throttle valve control part
	Throttle valve potentiometer -G692) Open circuit/short to earth	
	Throttle valve potentiometer -G692) Implausible signal	

1) The idling switch (F60) is a component of the throttle valve control part (J338).

1) The throttle valve potentiometer (G69) is a component of the throttle valve control part (J338).

Fault code	Fault text	Fault elimination
00520	Air mass/flow meter-G70/G19 Open circuit/short to earth	- Check air mass meter => Page 63
	Air mass/flow meter-G70/G19 Short to positive	
00522	Coolant temperature sender -G62 Open circuit/short to positive	- Check coolant temperature sender => Page 73
	Coolant temperature sender -G62 Short to earth	- Check thermostat: => Repair group 19; Removing and installing parts of cooling system; Parts of cooling system, engine side Parts of cooling system, engine side
	Coolant temperature sender -G62 Implausible signal	

Fault code	Fault text	Fault elimination
00523	Intake air temperature sender-G42 Open circuit/short to positive	- Check intake air temperature sender => Page 77
	Intake air temperature sender-G42 Short to earth	

satelettronica
Protected by copyright. Copyright by Volkswagen AG. Volkswagen AG does not guarantee or accept any liability with respect to the correctness of information in this document. Copyright by Volkswagen AG.

Fault code	Fault text	Fault elimination
00524	Knock sensor 1 -G61 Implausible signal	- Check knock sender =>Page 134
	Knock sensor 1 -G61 Defective	
00525	Lambda probe -G39 Short to positive	- Check Lambda probe heating => Page 60
	Lambda probe -G39 Short to earth	- Check Lambda probe and Lambda probe heating=>Page 95
	Lambda probe -G39 Output open	
	Lambda probe -G39 Implausible signal	
	Lambda probe -G39 Signal to low	
	Lambda probe -G39 Signal outside tolerance	

Fault code	Fault text	Fault elimination
00530	Throttle valve positioner/potentiometer-G881) Open circuit/short to positive	- Adapt engine control unit to throttle valve control part => Page 106
	Throttle valve positioner/potentiometer -G881) Open circuit/short to earth	- Check throttle valve positioner/potentiometer =>Page 65 , Checking throttle valve control part
	Throttle valve positioner/potentiometer -G881) Implausible signal	

1) The throttle valve positioner/potentiometer (G88) is a component of the throttle valve control part (J338). It supplies information on the position of the throttle valve positioner to the control unit.

Fault code	Fault text	Fault elimination
00533	Idling speed regulation Lower stop value	- Check throttle valve positioner => Page 65 , Checking throttle valve control part
	Idling speed regulation Upper stop value	- Check injectors =>Page 83 - Check air intake system for leaks (unmetered air) => Page 92 - Check signal from power-assisted steering pressure switch => Page 117 - Check for blockage of air cleaner, replace if necessary

Fault code	Fault text	Fault elimination
00537	Lambda regulation Lower stop value	- Check Lambda probe and Lambda regulation =>Page 95
		- Check activated charcoal filter system solenoid valve I => Page 16 , Final control diagnosis
		- Check injectors =>Page 83
		- Check fuel pressure regulator and holding pressure => Page 89

Note on fault code 00513:

If the fault "Lambda regulation, Lower stop value" is recognised, the Lambda regulation has reached the regulating limit in the direction of "making leaner". Nevertheless, the Lambda probe is still registering a "rich" mixture.

Fault code	Fault text	Fault elimination
00537	Lambda regulation Upper stop value	- Check Lambda probe and Lambda regulation=>Page 95

satelettronica

		- Check injectors =>Page 83
		- Check fuel pressure regulator and holding pressure => Page 89
		- Check intake system for leaks (unmetered air) => Page 92
		- Check fuel pump: => Repair group 20; Removing and installing parts of fuel supply system; Checking fuel pump Checking fuel pump

Note on fault code 00537:

If the fault "Lambda regulation, Upper stop value" is recognised, the Lambda regulation has reached the regulating limit in the direction of "enriching". Nevertheless, the Lambda probe is still registering a "lean" mixture.

Fault code	Fault text	Fault elimination
00557	Power assisted steering pressure switch -F88 Short to earth	- Check signal from power assisted steering pressure switch => Page 117
00609	Ignition output 1 Short to positive	- Check ignition coil => Page 130
00610	Ignition output 2 Short to positive	

Note on fault code 00557:

If the fault is stored, it is possible that the subsequent fault "00533, Idling speed regulation, Lower stop value" has also been stored.

Note on fault codes 00609 and 00610:

Ignition outputs 1 and 2 are the outputs on the engine control unit via which the engine control unit activates the output stage (N122) of the ignition transformer (N152).

Fault code	Fault text	Fault elimination
00625	Road speed signal Implausible signal	- Check road speed signal => Page 108
00635	Lambda probe heating before catalyst Defective	- Check Lambda probe heating => Page 60
00650	Clutch pedal switch -F36 Short to positive	- Check clutch pedal switch signal => Page 119
00668	System voltage terminal 30 Open circuit	- Check voltage supply to control unit => Page 102
		- Adapt engine control unit to throttle valve control part => Page 106

Note on fault code 00513:

If the fault is recorded, the engine control unit assumes a fixed substitute value of 5 km/h.

Note on fault code 00513:

- The positive voltage supply to the Lambda probe heating comes via the fuel pump relay (J17).
- The earth connection for the lambda probe heating is provided by the engine control unit, i.e. the entire current supply for the lambda probe heating comes via the engine control unit.

Fault code	Fault text	Fault elimination
01013	Air conditioning compressor load signal Open circuit/short to earth	- Check signal to and from air conditioning => Page 111
	Air conditioning compressor load signal Short to positive	

Protected by copyright. Copyright by Volkswagen AG. Volkswagen AG does not guarantee or accept any liability with respect to the correctness of information in this document. Copyright by Volkswagen AG. Protected by copyright. Copying for private or commercial purposes, in part or in whole, is not permitted unless authorised by Volkswagen AG.
satelettronica

01087	Basic setting not carried out Implausible signal	- Adapt engine control unit to throttle valve control part => Page 106
		- Check voltage supply for control unit => Page 102
		- Check throttle valve control part (J338)=>Page 65

Fault code	Fault text	Fault elimination
01126	Engine speed signal Defective	- Check engine speed signal => Page 110
01163	Backfire	- Check ignition transformer=> Page 130
		- Check intake system for leaks (unmetered air) => Page 92
01177	Engine control unit Defective	- Check voltage supply for control unit => Page 102
		- Renew engine control unit =>Page 104

Note on fault code 01126:

The "engine speed signal" is not the signal from "engine speed sender (G28)" on the crankshaft, but rather an engine speed signal put out by the engine control unit. This signal is needed, among other things, by the automatic gearbox control unit for calculating the shift points and for the rev counter in the dash panel insert.

Note on fault code 01163:

The engine cannot be started until the fault entered in the fault memory has been erased =>Page 9 , Interrogating and erasing fault memory

Fault code	Fault text	Fault elimination
01242	Output state in control unit Defective	- Renew engine control unit =>Page 104
01243	Intake manifold press.change valve-N156 Short to positive	- Check N156 => Page 16 , Final control diagnosis
	Intake manifold press.change valve-N156 Short to earth	
	Intake manifold press.change valve-N156 Output open	
01247	ACF solenoid 1-N80 Short to positive	- Check N80 => Page 16 , Final control diagnosis
	ACF solenoid 1-N80 Short to earth	
	ACF solenoid 1-N80 Output open	

Fault code	Fault text	Fault elimination
01249	Injector, cylinder 1 -N30 Short to positive	- Check injector =>Page 83
	Injector, cylinder 1 -N30 Short to earth	
	Injector, cylinder 1 -N30 Output open	
01250	Injector, cylinder 2 -N31 Short to positive	- Check injector =>Page 83
	Injector, cylinder 2 -N31 Short to earth	
	Injector, cylinder 2 -N31 Output open	
01251	Injector, cylinder 3 -N32 Short to positive	- Check injector =>Page 83

satelettronica

	Injector, cylinder 3 -N32 Short to earth	
	Injector, cylinder 3 -N32 Output open	

Fault code	Fault text	Fault elimination
01252	Injection, cylinder 4 -N33 Short to positive	- Check injector =>Page 83
	Injection, cylinder 4 -N33 Short to earth	
	Injection, cylinder 4 -N33 Output open	
01259	Fuel pump relay -J17 Defective	- Check J17 => Page 16 , Final control diagnosis
01312	Drive train data bus defective	- Check data bus wiring for open circuit to engine control unit (pins 29 and 31) using current flow diagram: => Current flow diagrams, Electrical fault finding and Fitting locations

Note on fault code 01259:

If the fault is stored, the faults "00520, 00635, 01247 and 01249...01252 could also be stored as these components are supplied with voltage via the fuel pump relay (J17).

Fault code	Fault text	Fault elimination
01315	Gearbox control unit, No communication	- Check data bus wiring for open circuit to engine control unit (pins 29 and 31) using current flow diagram: => Current flow diagrams, Electrical fault finding and Fitting locations
01316	Brake control unit, No communication	- Check data bus wiring for open circuit to engine control unit (pins 29 and 31) using current flow diagram: => Current flow diagrams, Electrical fault finding and Fitting locations
01321	Airbag control unit, No communication	- Check data bus wiring for open circuit to engine control unit (pins 29 and 31) using current flow diagram: => Current flow diagrams, Electrical fault finding and Fitting locations

Fault code	Fault text	Fault elimination
17978	Engine control unit blocked	- Adapt engine control unit to electronic immobilizer => Electrical system self-diagnosis; Repair group 01; Immobilizer self-diagnosis; Adapting after renewing engine control unit Immobilizer self-diagnosis; Adapting after renewing engine control unit

Note to fault code 17978:

If starting is attempted with an unauthorised key a permanent fault will be stored. After a subsequent start with an authorised key the fault will be converted to a sporadic fault.

Protected by copyright. Copying for private or commercial purposes, in part or in whole, is not permitted unless authorised by Volkswagen AG. Volkswagen AG does not guarantee or accept any liability with respect to the correctness of information in this document. Copyright by Volkswagen AG.

satelettronica

4 - Final control diagnosis

4.1 - Final control diagnosis

4.2 - Performing final control diagnosis

The final control diagnosis activates the following components in the stated sequence:

1. Fuel pump relay -J17

2. Solenoid valve 1 for activated charcoal filter -N80

3. Intake manifold change-over valve -N156

Special tools, workshop equipment, testers, measuring instruments and auxiliary items required

- Diode test lamp V.A.G 1527
- Fault reader V.A.G 1551 (or vehicle system tester V.A.G 1552) with cable V.A.G 1551/3
- Adapter set V.A.G 1594
- Test box V.A.G 1598/22
- Current flow diagram

Check conditions

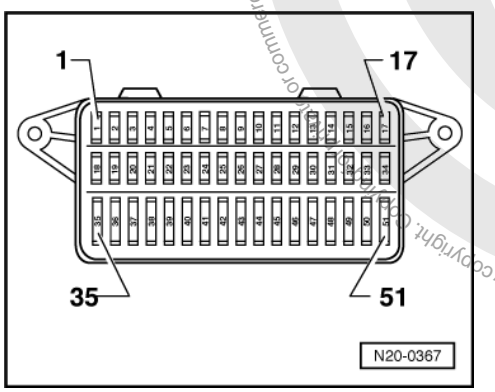

- -> The fuses 1, 31, 36 and 40 must be OK.
- The battery voltage must be at least 11.5 V.
- Earth connection in plenum chamber OK.
- All electrical consumers, e.g. lights and rear window heating must be switched off.
- If the vehicle is equipped with an air conditioner, this must be switched off.

Notes:

- All functions of V.A.G 1551/1552 can also be carried out with the new tester VAS 5051. Connecting VAS 5051 => Page 5 .
- The final control diagnosis can only be carried out if the engine is stationary and ignition switched on.
- The final control diagnosis will be broken off if the engine is started or a rotational impulse is recognised.
- During the final control diagnosis the individual final controls are activated 50 times unless the ⇒ key is pressed to switch manually to the next final control.
- The final controls are checked acoustically or by touching.
- If it is necessary to repeat the final control diagnosis, without first running the engine briefly, switch the ignition off for approx. 2 seconds.
- The electric fuel pump will run during the complete final control diagnosis.

Work sequence

- Connect the fault reader V.A.G 1551 (V.A.G 1552). Then switch ignition on and select engine control unit with the "Address word" 01.

Protected by copyright. Copyright by Volkswagen AG.
Volkswagen AG does not guarantee or accept any liability with respect to the correctness of information in this document.
Copyright by Volkswagen AG. Volkswagen AG. not permitted unless authorised by Volkswagen AG. for commercial purposes, in whole or in part.
satelettronica

(Connecting fault reader and selecting engine control unit => Page 2.)

-> Indicated on display:

```
Rapid data transfer      HELP
Select function XX
```

- Operate fault reader taking into account the information on the display:
- Press keys 0 and 3 for the function "Final control diagnosis".

-> Indicated on display:

```
Rapid data transfer      Q
03 Final control diagnosis
```

Activating fuel pump relay (J17):

- Confirm input with Q key.

-> Indicated on display:

```
Final control diagnosis
Fuel pump relay-J17
```

Fuel pump relay (relay position 6 on relay plate) must click (maximum 50 times) until you activate the next final control by pressing the ⇒key.

Note:

During the activation of the fuel pump relay the fuel pump must be heard to run at intervals.

If the relay does not click:

- Check fuel pump relay:

=> Current flow diagrams, Electrical fault finding and Fitting locations

Activating activated charcoal filter solenoid valve 1 (N80):

- Press ⇒key.

-> Indicated on display:

```
Final control diagnosis
Activ. charcoal filter solenoid valve
1     -N80
```

The activated charcoal filter solenoid valve 1 must click (maximum 50 times) until you activate the next final control by pressing the ⇒key.

If the solenoid valve does not click:

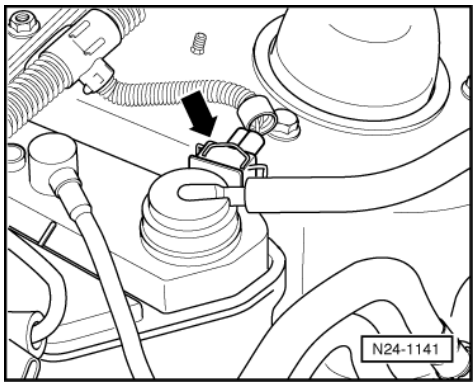

- -> Pull the 2 pin connector off solenoid valve 1 (N80) -arrow-.

Protected by copyright. Copying for private or commercial purposes, in part or in whole, is not permitted unless authorised by Volkswagen AG. Volkswagen AG does not guarantee or accept any liability with respect to the correctness of information in this document. Copyright by Volkswagen AG.
satelettronica

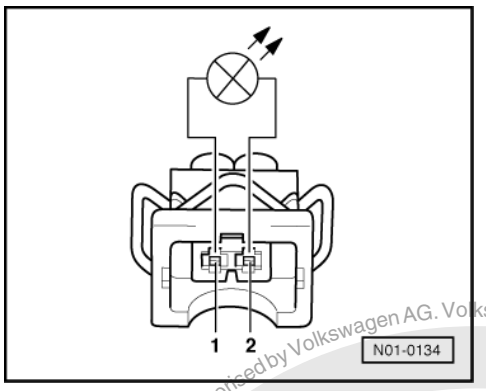

- -> Connect diode test lamp V.A.G 1527 using adapter cables from V.A.G 1594 to detached connector.
  The LED must flash

LED flashes:

- Proceed with final control diagnosis until completed.
- Switch off ignition.
- Replace solenoid valve 1 (N80):

=> Repair group 20; Activated charcoal filter system; Servicing parts of activated charcoal filter system Activated charcoal filter system Servicing parts of activated charcoal filter system

- Interrogate fault memory, if necessary, repair any faults and then erase fault memory => Page 9 , interrogating and erasing fault memory.

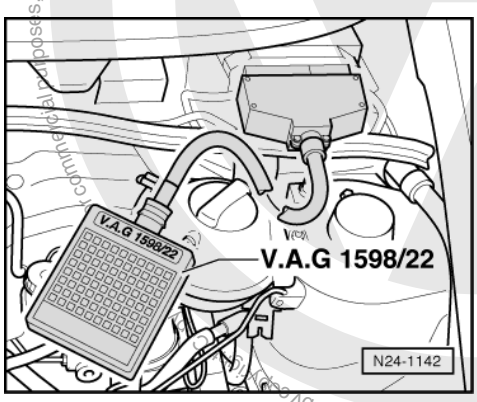

LED does not flash:

- Proceed with final control diagnosis until completed.
- Switch off ignition.
- -> Connect test box V.A.G 1598/22 to control unit wiring harness.

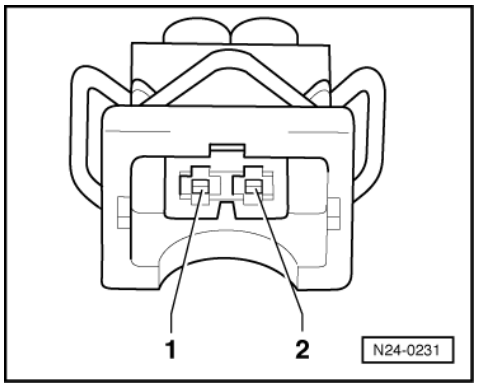

- -> Check wiring for open circuit between test box and 2-pin connector using current flow diagram:
  Contact 2 and test box socket 15
  Wire resistance: max. 1.5 ω

Protected by copyright. Copying for private or commercial purposes, in part or in whole, is not permitted unless authorised by Volkswagen AG. Volkswagen AG does not guarantee or accept any liability with respect to the correctness of information in this document. Copyright by Volkswagen AG.
satelettronica

- Check wiring additionally for short to vehicle earth or battery positive.
  Specification: ∞ω

- Check wire between 2 pin connector contact 1 and fuel pump relay (J17) for open circuit using current flow diagram.
  Wire resistance: max. 1.5 ω

If no wiring fault is detected:

- Replace engine control unit
  => Page 104 .

Activating intake manifold change-over valve (N156):

- Press ⇒key.

-> Indicated on display:

```
Final control diagnosis
Intake manifold change-over valve -N156
```

The intake manifold change-over valve must click (maximum 50 times) until you the final control diagnosis by pressing the ⇒key.

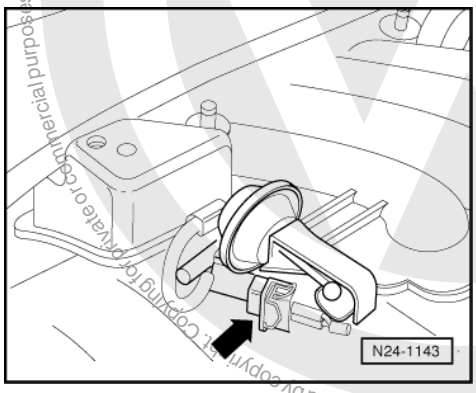

Note:

Checking intake manifold change-over => Page 100 .

If the solenoid valve does not click:

- -> Pull 2-pin connector off intake manifold change-over valve (N156) -arrow-.

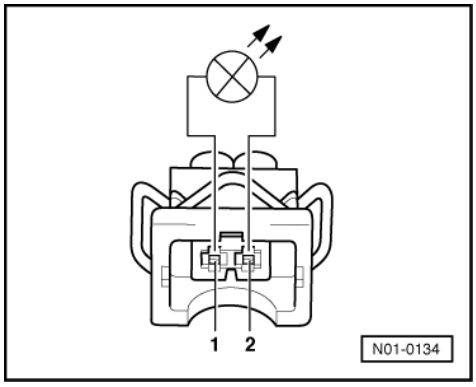

- -> Connect diode test lamp V.A.G 1527 using adapter cables from V.A.G 1594 to detached connector.
  The LED must flash

Protected by copyright. Copying for private or commercial purposes, in part or in whole, is not permitted unless authorised by Volkswagen AG. Volkswagen AG does not guarantee or accept any liability with respect to the correctness of information in this document. Copyright by Volkswagen AG.
satelettronica

LED flashes:

- Proceed with final control diagnosis until completed.
- Switch off ignition.
- Renew intake manifold change-over valve (N156)
  Page 53 , item 12 .
- Interrogate fault memory, if necessary, repair any faults and then erase fault memory => Page 9 , interrogating and erasing fault memory.

LED does not flash:

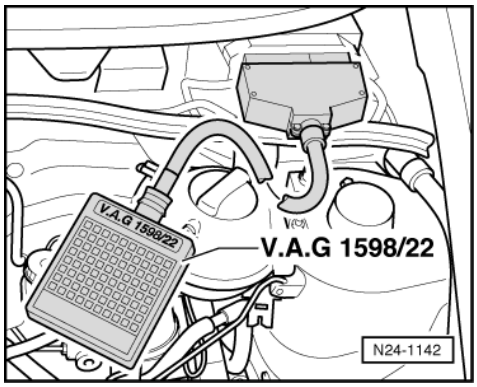

- Proceed with final control diagnosis until completed.
- Switch off ignition.
- -> Connect test box V.A.G 1598/22 to control unit wiring harness.

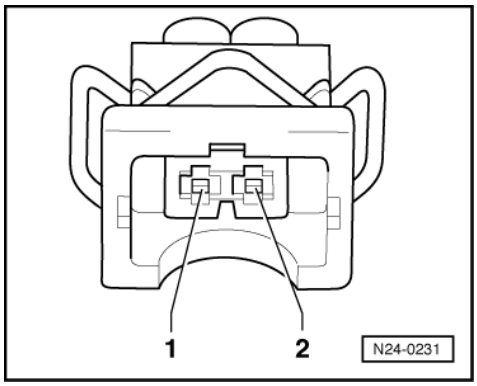

- -> Check wiring for open circuit between test box and 2-pin connector using current flow diagram:
  Contact 2 and test box socket 64
  Wire resistance: max 1.5 ω
- Check wiring additionally for short to vehicle earth or battery positive.
  Specification: ∞ω
- Check wire between 2 pin connector contact 1 and fuel pump relay (J17) for open circuit using current flow diagram.
  Wire resistance: max. 1.5 ω

If no wiring fault is detected:

- Replace engine control unit
  => Page 104 .
- Press ⇒key.

-> Indicated on display:

```
Final control diagnosis
END
```

-> Indicated on display:

```
Function not known or cannot
be carried out at the moment
```

Protected by copyright. Copying for private or commercial purposes, in part or in whole, is not permitted unless authorised by Volkswagen AG. Volkswagen AG does not guarantee or accept any liability with respect to the correctness of information in this document. Copyright by Volkswagen AG.
satelettronica

- Press ⇒key.

-> Indicated on display:

```
Rapid data transfer      HELP
Select function XX
```

- Press keys 0 and 6 for the "End output" function and confirm input with the Q key.
- Switch off ignition.

5 - Measured value blocks

5.1 - Measured value blocks

5.2 - Safety precautions

Observe following if test and measuring instruments are required during a test drive:

- Test and measuring instruments must be secured to rear seat and operated by a 2nd person from this location.

  If test and measuring instruments are operated from front passenger's seat and the vehicle is involved in an accident, there is a possibility that the person sitting in this seat may receive serious injuries when the airbag is triggered.

5.3 - Read measured value block

The measured values in the functions read measured value block and basic setting are described during the individual component test. This table serves only as an overview.

Special tools, workshop equipment, testers, measuring instruments and auxiliary items required

- Fault reader V.A.G 1551 (or vehicle system tester V.A.G 1552) with cable V.A.G 1551/3

Test conditions

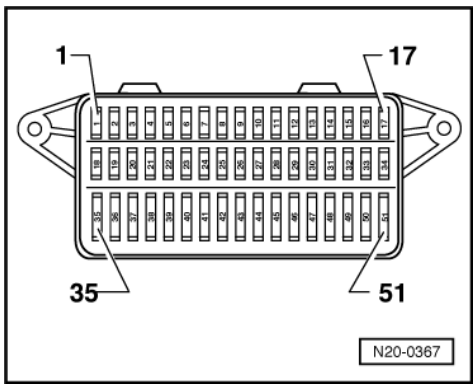

- -> The fuses 1, 3, 31, 34, 36 and 40 must be OK.
- Earth connection in plenum chamber OK.
- All electrical consumers, e.g. lights and rear window heating must be switched off.
- On vehicles with an automatic gearbox the selector lever must be in P or N.
- If the vehicle is equipped with an air conditioner, this must be switched off.
- No faults must be stored in fault memory => Page 9 , interrogating and erasing fault memory.

Protected by copyright. Copying for private or commercial purposes, in part or in whole, is not permitted unless authorised by Volkswagen AG. Volkswagen AG does not guarantee or accept any liability with respect to the correctness of information in this document. Copyright by Volkswagen AG.
satelettronica

- Coolant temperature must be at least 80 °C, =>Display group 01, display zone 2.

Work sequence

- Connect fault reader V.A.G 1551 (V.A.G 1552). Start engine and select "Address word" 01 of engine control unit. When doing this the engine must be running at idling speed.
  (Connecting fault reader and selecting engine control unit => Page 2 .)

-> Indicated on display:

```
Rapid data transfer      HELP
Select function XX
```

- Press keys 0 and 8 for the function "Read measured value block" and confirm entry with Q key.

-> Indicated on display:

```
Read measured value block
Input display group number XXX
```

- Select required display group number.

Note:

The display group number 1 is an example, to illustrate the sequence.

- Press keys 0, 0 and 1 for "Display group number 1" and confirm entry with Q key.

-> Indicated on display:
(1...4 = Display zones)

```
Read measured value block 1
     1     2     3     4
```

Note:

To change to another display group proceed as follows:

Display group	V.A.G 1551	V.A.G 1552
Higher	Press key 3	Press ↑key
Lower	Press key 1	Press ↓key
Skip	Press key C	Press key C

- If the specifications in all display zones are obtained, press ⇒key.

-> Indicated on display:

```
Rapid data transfer      HELP
Select function XX
```

- Press keys 0 and 6 for the "End output" function and confirm input with the Q key.
- Switch off ignition.

Note:

Measured value blocks which are not described in this chapter are currently only intended for the research and development and production. The values displayed are not relevant for service department fault finding.

Protected by copyright. Copyright by Volkswagen AG. Volkswagen AG does not guarantee or accept any liability with respect to the correctness of information in this document. Copyright by Volkswagen AG. Reproduced or published without authorised by Volkswagen AG. Volkswagen AG does not guarantee or accept any liability with respect to the correctness of information in this document. Copyright by Volkswagen AG.
satelettronica

6 - Evaluating measured value blocks, display groups 0...5 -Basic functions-

6.1 - Evaluating measured value blocks, display groups 0...5 -Basic functions-

Note:

If display group 001 of function 04 "Basic functions" is selected while ignition is switched on (engine off), the engine control unit will be adapted to the throttle valve control part => Page 106 (display group 98).

Display group 1 -Basic functions-						
▪ Engine running at idling speed						
Read measured value block 1 ⇒				[Itrif] Indicated on display		
xxxx rpm	xxx °C	x.xx V	xxxxxxxx			
1	2	3	4	[Itrif] Display zones	Specification	Evaluation
				Adjustment conditions for adapting throttle valve	00000010	=> Page 24
			Lambda probe voltage		0.00...1.00 V	=> Page 29
		Coolant temperature			80...110 °C	=> Page 23
	Engine speed (Idling speed)				820...940 rpm1)	=> Page 23

1) Up-to-date specifications:

=> Exhaust emissions test binder

Evaluating display group 1, display zone 1 - Engine speed (idling speed)

Appears on display	Possible fault cause	Fault elimination
Less than specification	- Throttle valve control part sticking or defective	- Check throttle valve control part => Page 65
	- Large amount of unmetered air (cannot be compensated for by the idling stabilisation)	- Check intake air system for leaks => Page 92
		- Perform idling check => Page 93
More than specification	- Idling switch not closed/defective	- Interrogate fault memory, => Page 9 , Interrogating and erasing fault memory
	- Large amount of unmetered air (cannot be compensated for by the idling stabilisation)	- Check intake air system for leaks => Page 92
	- Throttle valve control part sticking/defective	- Check throttle valve control part => Page 65
		- Perform idling check => Page 93

Evaluating display group 1, display zone 2 - Coolant temperature

Appears on display	Possible fault cause	Fault elimination
Less than specification	- Engine too cold	- If necessary carry out test drive
	- Coolant temperature sender (G62) or wiring to engine control unit	- Check coolant temperature sender =>Page 73
	- Thermostat sticking/defective	- Check thermostat: => Repair group 19; Removing and installing parts of cooling system; Parts of cooling system, engine side
More than specification	- Radiator soiled	- Clean radiator
	- Radiator fan not functioning	- Check function => Current flow diagrams, Electrical fault finding and Fitting locations

satelettronica

	- Thermostat sticking/defective	- Check thermostat: => Repair group 19; Removing and installing parts of cooling system; Parts of cooling system, engine side
	- Coolant temperature sender (G62) or wiring to engine control unit	- Check coolant temperature sender =>Page 73
Constant 120 °C	- Coolant temperature sender (G62) defective	- Check coolant temperature sender =>Page 73

Significance of figures in 8-digit number block, display zone 4 - Adjustment conditions for throttle valve adaption

Significance when display = 1								
1	2	3	4	5	6	7	8	Adjustment conditions for throttle valve adaption
1								Fault identified by self-diagnosis 1)
	1							Signal from automatic gearbox
		1						Air conditioner switched on
			1					Idling speed switch open 1)
				1				Fault in Lambda control
					1			Throttle valve open (angle check) 2)
						1		Engine running 1)
							1	Coolant temperature less than 80 °C

1) A fault has been recognised by self-diagnosis but which may not as yet be stored in the fault memory. If faults affecting the throttle valve control part have occurred, the throttle valve control part will not be adapted during the function "Basic setting".

2) If there is a "1" in the appropriate position, matching the throttle valve control part is not possible.

Display group 2 -Basic functions-						
▪ Engine running at idling speed						
Read measured value block 2			⇒	[Itrif] Indicated on display		
xxxx rpm	xxx mg/H	xxx km/h	xxxx			
1	2	3	4	[Itrif] Display zones	Specification	Evaluation
				Engine operating status	0100	=> Page 25
		Road speed			0 km/h	---
	Air mass drawn in (engine load)				76...164 mg/H	=> Page 24
Engine speed (Idling speed)					820...940 rpm1)	=> Page 23

1) Up-to-date specifications:

=> Exhaust emissions test binder

Note on display zone 3:

Checking road speed signal => Page 108

Evaluating display group 2, display zone 2 - Air mass drawn in (engine load)

Appears on display	Possible fault cause	Fault elimination
Less than specification	- Large amount of unmetered air between intake manifold and air mass meter	- Check air intake system for leaks => Page 92
Larger than specification	- Increased engine load due to electrical consumers, air conditioner, gear selected or P.A.S. on full lock	- Eliminate increased load (air conditioner, power assisted steering etc.)

satelettronica

	- Driving range selected (automatic gearbox)	- Place selector lever in P or N

Significance of figures in 4-digit number block, display zone 4 - Operating condition of engine

Significance when display = 1				
1	2	3	4	Operating status of engine
1				Overrun
	1			Idling
		1		Part throttle
			1	Full throttle

Display group 3 -Basic functions-						
▪ Engine running at idling speed						
Read measured value block 3 ⇒				[Itrif] Indicated on display		
xxxx rpm	xxx mg/H	xx.x <°	xxx %			
1	2	3	4	[Itrif] Display zones	Specification	Evaluation
				Throttle valve positioner duty cycle	-100...100 %	---
				Throttle valve angle	2.0...5.0 <°	=> Page 25
				Air mass drawn in (engine load)	76...164 mg/H	=> Page 24
				Engine speed (Idling speed)	820...940 rpm1)	=> Page 23

1) Up-to-date specifications:

=> Exhaust emissions test binder

Evaluating display group 3, display zone 3 - Throttle valve angle

Appears on display	Possible fault cause	Fault elimination
More than specification	- Engine control unit not adapted to throttle valve control part	- Adapt engine control unit to throttle valve control part => Page 106
	- Throttle valve potentiometer (G69) in throttle valve control part (J338) defective	- Check throttle valve potentiometer => Page 65 , Checking throttle valve control part
	- Accelerator cable adjustment	- Adjust accelerator cable => Repair group 20; Accelerator mechanism; Adjusting accelerator cable Adjusting accelerator cable
	- Throttle valve sticking	- Eliminate cause

Display group 4 -Basic functions-						
▪ Engine running at idling speed						
Read measured value block 4 ⇒				[Itrif] Indicated on display		
xxxx rpm	xxx mg/H	x.xx ms	x.x g/s			
1	2	3	4	[Itrif] Display zones	Specification	Evaluation
				Amount of air drawn in	1.0...3.2 g/s	---
				Injection period	2.0...5.00 ms	=> Page 26
				Air mass drawn in (engine load)	76...164 mg/H	=> Page 24
				Engine speed (Idling speed)	820...940 rpm1)	=> Page 23

1) Up-to-date specifications:

=> Exhaust emissions test binder

Protected by copyright. Copying for private or commercial purposes, in part or in whole, is not permitted unless authorised by Volkswagen AG. Volkswagen AG does not guarantee or accept any liability with respect to the correctness of information in this document. Copyright by Volkswagen AG.
satelettronica

Evaluating display group 2, display zone 4 - Injection period

Appears on display	Possible fault cause	Fault elimination
Less than specification	- Large amount of fuel from the activated charcoal filter system	- Check activated charcoal filter solenoid valve 1 => Page 16 , Final control diagnosis
	- Incorrect injectors with greater throughput installed	- Check injection rate => Page 83
Larger than specification	- Increased engine load due to electrical consumers, air conditioner, gear selected or P.A.S. on full lock	- Eliminate increased load (air conditioner, power assisted steering etc.)
	- Driving range selected (automatic gearbox)	- Place selector lever in P or N

Display group 5 -Basic functions-

▪ Engine running at idling speed

Read measured value block 5 ⇒ [Itrif] Indicated on display

xxxx rpm	xx.xx V	xxx °C	xxx °C	[Itrif] Display zones	Specification	Evaluation
1	2	3	4	Intake air temperature	about ambient temperature	=> Page 26
				Coolant temperature	80...110 °C	=> Page 23
				Voltage supply to engine control unit	11.50...15.00 V	=> Page 26
				Engine speed (Idling speed)	820...940 rpm1)	=> Page 23

1) Up-to-date specifications:

=> Exhaust emissions test binder

Evaluating display group 5, display zone 2 - Control unit voltage supply

Appears on display	Possible fault cause	Fault elimination
Less than specification	- Alternator defective, battery heavily discharged	- Check alternator and battery voltage, charge battery: => Electrical system; Repair group 27
	- Battery heavily loaded shortly after starting due to high charging current and current consumers	- Increase revs slightly for a few minutes and switch off current consumers
	- Transfer resistance in the current supply or the engine control unit earth connection	- Check engine control unit voltage supply => Page 102
	- Current draw when ignition is off	- Eliminate current draw
More than specification	- Voltage regulator on alternator defective	- Check voltage, replace regulator if necessary: => Electrical system; Repair group 27
	- Excess voltage due to jump starting or quick charging unit	- Interrogate fault memory => Page 9 , Interrogating and deleting fault memory.

Evaluating display group 5, display zone 4 - Intake air temperature

Appears on display	Possible fault cause	Fault elimination
Less or greater than specification	- Intake air temperature (G42) defective	- Check intake air temperature sender =>Page 77
Constant 40 °C		

Volkswagen AG does not guarantee or assume any liability with respect to the correctness of information in this document. Copyright by Volkswagen AG. Protected by copyright. Copying for private or commercial purposes, in part or in whole, is not permitted unless authorised by Volkswagen AG.
satelettronica

7 - Evaluating measured value blocks, display groups 6...9 -Engine speed regulation-

7.1 - Evaluating measured value blocks, display groups 6...9 -Engine speed regulation-

Display group 6 -Engine speed regulation- Elevation adaption						
▪ Engine running at idling speed						
Read measured value block 6			⇒	[Itrif] Indicated on display		
xxxx rpm	xxx mg/H	xx.x <°	x.xx			
1	2	3	4	[Itrif] Display zones	Specification	Evaluation
				Elevation correction factor	0.90...1.10	---
			Throttle valve angle		2.0...5.0 <°	=> Page 25
		Air mass drawn in (engine load)			76...164 mg/H	=> Page 24
	Engine speed (Idling speed)				820...940 rpm1)	=> Page 23

1) Up-to-date specifications:

=> Exhaust emissions test binder

Note:

Measured value block 7 is for information only and has no significance for fault-finding in the workshop.

Display group 7 -Engine speed regulation- Idling speed adjustment						
▪ Engine running at idling speed						
Read measured value block 7			⇒	[Itrif] Indicated on display		
xx.x <°	x.xx	x.xx	xxxx			
1	2	3	4	[Itrif] Display zones	Specification	Evaluation
				Engine operating status	0100	=> Page 25
			Idling speed regulation, learnt value ▪ Automatic gearbox with driving range selected		0.95...1.05	---
		Idling speed regulation, learnt value ▪ Manual gearbox in neutral ▪ Automatic gearbox with selector lever in P or N			0.95...1.05	---
	Throttle valve angle				2.0...5.0 <°	=> Page 25

Display group 8 -Engine speed regulation- Idling speed stabilisation						
▪ Engine running at idling speed						
Read measured value block 8			⇒	[Itrif] Indicated on display		
xxxx rpm	xxxx rpm	xx %	x.x g/s			
1	2	3	4	[Itrif] Display zones	Specification	Evaluation
				Amount of air drawn in	1.0...3.2 g/s	---
			Idling control		-10...15 %	---
		Engine speed (idling speed specification)			840...880 rpm	---
	Engine speed (Idling speed)				820...940 rpm1)	=> Page 23

1) Up-to-date specifications:

=> Exhaust emissions test binder

Note on display zone 2:

The specified engine speed from the engine control unit is displayed (temperature dependent internally calculated control unit value).

satelettronica

Display group 9 -Engine speed regulation- Idling speed air requirement						
▪ Engine running at idling speed						
Read measured value block 9			⇒	[Itrif] Indicated on display		
xx %	xxxxxxxx	xxx °C	xxxx rpm			
1	2	3	4	[Itrif] Display zones	Specification	Evaluation
				Engine speed (idling speed)	820...940 rpm1)	=> Page 23
			Coolant temperature		80...110 °C	=> Page 23
		Throttle valve control part operating status			00000000	=> Page 28
	Idling control				-10...15 %	---

1) Up-to-date specifications:

=> Exhaust emissions test binder

Significance of figures in 8-digit number block, display zone 2 - Throttle valve control unit operating status

Significance when display = 1								
1	2	3	4	5	6	7	8	Throttle valve control unit operating status
0								Not allocated
	0							Not allocated
		0						Not allocated
			0					Not allocated
				1				Fault has occurred during the adaption of the throttle valve Interrogate fault memory => Page 9 , Interrogating and erasing fault memory
					1			No current supply to throttle valve control part (duty cycle = 0)
						1		Adaption interrupted due to the battery voltage being too low (below 8.0V).
							1	Idling switch open (interrogation of switch)

8 - Evaluating measured value blocks, display groups 10...12 -Lambda regulation-

8.1 - Evaluating measured value blocks, display groups 10...12 -Lambda regulation-

Display group 10 -Lambda regulation- Activated charcoal filter system						
▪ Engine running at idling speed						
Read measured value block 10			⇒	[Itrif] Indicated on display		
xx %	x.xx V	xx %	xx %			
1	2	3	4	[Itrif] Display zones	Specification	Evaluation
				Lambda correction factor when tank venting is active	-20...2 %	---
			Activated charcoal filter solenoid valve 1 duty cycle		0...20 %	---
		Lambda probe voltage			0.00...1.00 V	=> Page 29
	Lambda regulator				-25...25 %	---

Notes on display zone 2:

- The voltage signal "rich mixture (low level of residual oxygen)" is approx. 0.7...1.0 V.
- The voltage signal "lean mixture (high level of residual oxygen)" is approx. 0.0...0.3 V.
- When changing from "rich" to "lean" and back again (font=symbol charset=fontspecific code=108 TeX='\lambda ' descr='[lambda]' = 1.0) the voltage jump will change from 0.7...1.0 V to 0.0...0.3 V or back again.

Protected by copyright. Copying for private or commercial purposes, in part or in whole, is not permitted unless authorised by Volkswagen AG. Volkswagen AG does not guarantee or accept any liability with respect to the correctness of information. Copyright by Volkswagen AG.
satelettronica

- Due to the steep voltage jumps, the Lambda control cannot keep the ideal mixture compositionfont=symbol charset=fontspecific code=108 TeX='\lambda ' descr='[lambda]'= 1.0 constant. The control fluctuates constantly between conditions "slightly too lean" and "slightly too rich".
- The displayed value must temporarily drop below 0.3 V and exceed 0.6 V. Displayed values below 0.45 V signifies lean, above 0.45 V rich.

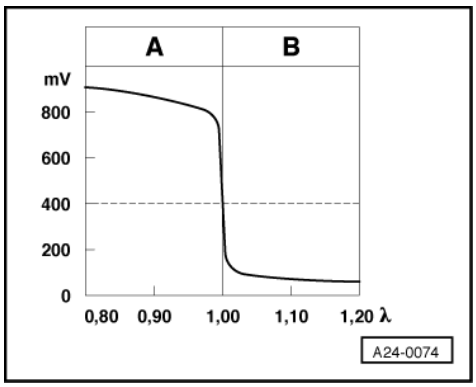

-> Lambda probe voltage Ufont=symbol charset=fontspecific code=108 TeX='\lambda ' descr='[lambda]' in mV

A: High Lambda probe voltage

- Rich mixture (excess of fuel or shortage of air)
- Higher CO value

B: Low Lambda probe voltage

- Lean mixture (shortage of fuel or excess air)
- Lower CO value

Evaluation: Display group 10, display zone 2 - Lambda probe voltage

Appears on display	Possible fault cause	Fault elimination
Display does not fluctuate	- Large amount of unmetered air	- Check air intake system for leaks =>Page 92
Constantly between: 0.00...0.30 V or 0.70...1.00 V	- Spark plug defective - Spark plug connector defective	- Check spark plugs and ignition cables with connectors => Page 124 , Removing and installing parts of ignition
	- Fuel pressure too low or too high	- Check fuel pressure regulator and holding pressure => Page 89
	- Injector defective	- Check injectors => Page 83
	- Coolant temperature sender defective	- Check coolant temperature sender =>Page 73
	- Activated charcoal filter solenoid valve 1 defective	- Check solenoid valve 1 for activated charcoal filter => Page 16 , Final control diagnosis
	- Lambda probe heating not functioning	- Check Lambda probe heating => Page 60
Continued on next page	- Lambda probe defective or soiled	- Check Lambda probe and Lambda probe heating => Page 95

Appears on display	Possible fault cause	Fault elimination

satelettronica

Constant about 5.00 V	- Short to positive via: - Lambda probe, probe wiring, earth wire, engine control unit	- Check Lambda probe wiring => Page 98
Constant between 1.50...1.60 V	- Wiring open circuit via: - Fuse, Lambda probe, probe wire, earth wire, engine control unit	
Constant about 0.00 V	- Short to earth via: - Lambda probe, probe wire, earth wire, engine control unit	

Display group 11 -Lambda regulation- Lambda learnt values

▪ Engine running at idling speed

Read measured value block 11 ⇒ [Itrif] Indicated on display

x.xx ms	x.xx ms	x.xx	xxxxxxxx	[Itrif] Display zones	Specification	Evaluation
1	2	3	4	Activated charcoal filter solenoid valve 1, operating condition	---	=> Page 31
				Lambda learnt value at part load	0.9...1.15	=> Page 30
				Lambda learnt value at idling	-0.50...0.50 ms	=> Page 30
				Injection period	2.00...5.00 ms	=> Page 26

Notes on display zone 2:

- Positive Lambda learnt value at idle (+...ms):
  Programmed basic injection period too short; actual injection period ...ms longer so that font=symbol charset=fontspecific code=108 TeX='\lambda ' descr='[lambda]' = 1 is achieved.
- Negative Lambda learnt value at idle (-...ms):
  Programmed basic injection period too long; actual injection period ...ms shorter so that font=symbol charset=fontspecific code=108 TeX='\lambda ' descr='[lambda]' = 1 is achieved.

Notes on display zone 3:

- Lambda learnt value greater than 1 at partial load
  Programmed basic injection period too short; actual injection period longer so that font=symbol charset=fontspecific code=108 TeX='\lambda ' descr='[lambda]' = 1 is achieved.
- Lambda learnt value less than 1 at partial load
  Programmed basic injection period too long; actual injection period shorter so that font=symbol charset=fontspecific code=108 TeX='\lambda ' descr='[lambda]' = 1 is achieved.

Evaluating display group 11, display zones 2 and 3 - Lambda learnt values

Appears on display	Possible fault cause	Fault elimination
Outside tolerance range	- Negative range: Mixture too rich, Lambda regulation weakens mixture - Positive range: Mixture too lean, Lambda regulation enriches mixture	- Wait 30 seconds until the display has stabilised
	- Injector defective	- Check injectors => Page 83

satelettronica

	- Unmetered air	- Check intake system for leaks => Page 92

Significance of figures in 8-digit number block, display zone 4 - Activated charcoal filter solenoid valve 1 operating condition

Significance when display = 1								
1	2	3	4	5	6	7	8	Activated charcoal filter solenoid valve 1 operating condition
0								Vacant
	1							Transition to load determination
		1						Transition to minimal operation
			1					Transition to valve closure
				1				Load determination
					1			Normal operation
						1		Minimal operation
							1	Valve closed

Display group 12 -Lambda regulation-						
▪ Engine running at idling speed						
Read measured value block 12			⇒	[ltrif] Indicated on display		
xxxx rpm	xxx mg/H	xx %	x.xx V			
1	2	3	4	[ltrif] Display zones	Specification	Evaluation
				Lambda probe voltage	0.00...1.00 V	=> Page 29
			Lambda regulation		-25...25 %	---
		Air mass drawn in (engine load)			76...164 mg/H	=> Page 24
	Engine speed (Idling speed)				820...940 rpm1)	=> Page 23

1) Up-to-date specifications:

=> Exhaust emissions test binder

9 - Evaluating measured value blocks, display groups 13...18 -Ignition-

9.1 - Evaluating measured value blocks, display groups 13...18 -Ignition-

Display group 13 -Ignition- Fuel consumption						
▪ Engine running at idling speed						
Read measured value block 13			⇒	[ltrif] Indicated on display		
xxxx rpm	xxx mg/H	xxx km/h	x.xx ltr./h			
1	2	3	4	[ltrif] Display zones	Specification	Evaluation
				Fuel consumption	0.50...2.00 ltr./h	---
			Road speed		0 km/h	---
		Air mass drawn in (engine load)			76...164 mg/H	=> Page 24
	Engine speed (Idling speed)				820...940 rpm1)	=> Page 23

1) Up-to-date specifications:

=> Exhaust emissions test binder

Protected by copyright. Copying for private or commercial purposes, in part or in whole, is not permitted unless authorised by Volkswagen AG. Volkswagen AG does not guarantee or accept any liability with respect to the correctness of information in this document. Copyright by Volkswagen AG.

sateletronica

Note on display zone 3:

Check speed signal => Page 108

Notes on display zone 4:

- Not relevant for fault finding within service department.
- ltr./100 km not suitable for fuel consumption measurement.

Display group 14 -Ignition- Knock control cylinders 1 to 4						
▪ Whilst driving						
Read measured value block 14			⇒	[ltrif] Indicated on display		
xx.x °CA	xx.x °CA	xx.x °CA	xx.x °CA			
1	2	3	4	[ltrif] Display zones	Specification	Evaluation
				Cylinder 4 ignition retarded via knock regulation	0.0...12.0 °KW	=> Page 32
				Cylinder 3 ignition retarded via knock regulation	0.0...12.0 °KW	=> Page 32
				Cylinder 2 ignition retarded via knock regulation	0.0...12.0 °KW	=> Page 32
				Cylinder 1 ignition retarded via knock regulation	0.0...12.0 °KW	=> Page 32

Note on display zones 1 to 4:

Display value should be 0.0 °CA at idling speed.

Evaluating display group 14, display zones 1 to 4 - Ignition retardation cylinders 1 to 4

Appears on display	Possible fault cause	Fault elimination
All cylinders between: 8.0...12.0 °CA and at same value	- Knock sensor defective - Connector corroded	- Check knock sensor => Page 134
	- Knock sensor incorrectly tightened	- Loosen knock sensor and tighten to 20 Nm
	- Ancillary components on engine loose	- Tighten ancillary components
	- Poor fuel quality	- Change type of fuel
One cylinder deviates greatly from the others	- Connector corroded	- Check knock sensor => Page 134
	- Engine damaged	- Check compression pressures: => Repair group 15; Removing and installing cylinder head; Checking compression pressure Checking compression pressure
	- Ancillary components on engine loose	- Tighten ancillary components

Display group 15 -Ignition- Knock control cylinders 1 and 2						
▪ Whilst driving						
Read measured value block 15			⇒	[ltrif] Indicated on display		
xxx rpm	xxx mg/H	xx.x°CA	xx.x °CA			
1	2	3	4	[ltrif] Display zones	Specification	Evaluation
				Cylinder 2 ignition retardation via knock regulation	0.0...12.0 °CA	=> Page 33
				Cylinder 1 ignition retardation via knock regulation	0.0...12.0 °CA	=> Page 33
				Air mass drawn in (engine load)	---	---

satelettronica
Protected by copyright. Copyright by Volkswagen AG. Volkswagen AG does not guarantee or accept any liability with respect to the correctness of information in this document. Copyright by Volkswagen AG. Volkswagen AG. Volkswagen AG does not permit unless authorised, not for commercial purposes, in part or in whole

Engine speed	820...6350 rpm	---

Note on display zones 3 and 4:

Display value should be 0.0 °CA at idling speed.

Display group 16 -Ignition- Knock control cylinders 3 and 4			
▪ Whilst driving			
Read measured value block 16 ⇒	[Itrif] Indicated on display		
xxx rpm / xxx mg/H / xx.x°CA / xx.x °CA			
[Itrif] Display zones		Specification	Evaluation
4	Cylinder 4 ignition retardation via knock regulation	0.0...12.0 °KW	=> Page 33
3	Cylinder 3 ignition retardation via knock regulation	0.0...12.0 °KW	=> Page 33
2	Air mass drawn in (engine load)	---	---
1	Engine speed	820...6350 rpm	---

Note on display zones 3 and 4:

Display value should be 0.0 °CA at idling speed.

Evaluating display groups 15 and 16, display zones 3 and 4 - Ignition retardation

Appears on display	Possible fault cause	Fault elimination
All cylinders between: 8.0...12.0 °CA and at same value	- Knock sensor defective - Connector corroded	- Check knock sensor => Page 134
	- Knock sensor incorrectly tightened	- Loosen knock sensor and tighten to 20 Nm
	- Ancillary components on engine loose	- Tighten ancillary components
	- Poor fuel quality	- Change type of fuel
One cylinder deviates greatly from the others	- Connector corroded	- Check knock sensor => Page 134
	- Engine damaged	- Check compression pressures: => Repair group 15; Removing and installing cylinder head; Checking compression pressure Checking compression pressure
	- Ancillary components on engine loose	- Tighten ancillary components

Display group 17 -Ignition- Knock senor voltage signal			
▪ Engine running at idling speed			
Read measured value block 17 ⇒	[Itrif] Indicated on display		
x.xxx Vpt / x.xxx Vpt / x.xxx Vpt / x.xxx Vpt			
[Itrif] Display zones		Specification	Evaluation
4	Cylinder 4 knock sensor voltage signal	0.400...1.300 Vpt	---
3	Cylinder 3 knock sensor voltage signal	0.400...1.300 Vpt	---
2	Cylinder 2 knock sensor voltage signal	0.400...1.300 Vpt	---
1	Cylinder 1 knock sensor voltage signal	0.400...1.300 Vpt	---

Note on display zones 1 to 4:

- If there is more than 50 % difference between the smallest and largest knock sensor signal, the cause could be corrosion on the connector.

Protected by copyright. Copying for private or commercial purposes, in part or in whole, is not permitted unless authorised by Volkswagen AG. Volkswagen AG does not guarantee or accept any liability with respect to the correctness of information in this document. Copyright by Volkswagen AG.
sateletronica

- Check knock sensor => Page 134 .
- If after checking the wiring and connectors no fault can be found, the engine should be checked for loose sub-assemblies or engine damage.
- At high engine speeds the displayed signal voltage for the knock sensors can reach 5.1 Volt.

Display group 18 -Ignition- Torque reduction for automatic gearbox						
▪ Engine running at idling speed						
Read measured value block 18			⇒	[Itrif] Indicated on display		
xxxx rpm	xxx mg/H	x.x°CA	xx.x ° BTDC			
1	2	3	4	[Itrif] Display zones	Specification	Evaluation
				Ignition timing	-6.0...14.0 °BTDC	---
			Ignition timing retardation for gearbox cut-in		0.0 °CA	---
		Air mass drawn in (engine load)			76...164 mg/H	=> Page 24
	Engine speed (Idling speed)				820...940 rpm1)	=> Page 23

1) Up-to-date specifications:

=> Exhaust emissions test binder

Note on display zone 4:

Is not relevant for fault finding in service department.

10 - Evaluating measured value blocks, display groups 19...99 -Operating condition-

10.1 - Evaluating measured value blocks, display groups 19...99 -Operating condition-

Display group 19 -operating conditions-						
▪ Engine running at idling speed						
Read measured value block 19			⇒	[Itrif] Indicated on display		
xxxx rpm	x	x	xxxxxxxx			
1	2	3	4	[Itrif] Display zones	Specification	Evaluation
				Operating condition	00000000	=> Page 35
			Vehicles with air conditioning: ▪ Air conditioning off ▪ Air conditioning on		0 1	---
		Vehicles with automatic gearbox: ▪ No driving range selected, selector lever in P or N ▪ Driving range selected, selector lever in 1, 2, 3, R or D			0 1	---
	Engine speed (Idling speed)				820...940 rpm1)	=> Page 23

1) Up-to-date specifications:

=> Exhaust emissions test binder

Note on display zone 2:

Check driving range signal =>Page 115 .

Note on display zone 3:

Check signals to and from air conditioning =>Page 111 .

Protected by copyright. Copyright by Volkswagen AG. Volkswagen AG does not guarantee or accept any liability with respect to the correctness of information in this document. Copyright by Volkswagen AG.
satelettronica

Significance of figures in 8-digit number block, display zone 4 - Operating conditions

Significance when display = 1								
1	2	3	4	5	6	7	8	Operating conditions
0								Not allocated
	0							Not allocated
		0						Not allocated
			0					Not allocated
				0				Not allocated
					1			Clutch pedal switch operated
						1		Power steering pressure switch (F88) activated
							1	A/C compressor switched on

Display group 20 -Operating condition- Lambda regulation						
▪ Engine running at idling speed						
Read measured value block 20 ⇒				[Itrif] Indicated on display		
xxxx rpm	xxx mg/H	xxx °C	xxxxxxxx			
1	2	3	4	[Itrif] Display zones	Specification	Evaluation
				Operating condition of Lambda regulation	0001011x	=> Page 35
			Coolant temperature		80...110 °C	=> Page 23
		Air mass drawn in (engine load)			76...164 mg/H	=> Page 24
	Engine speed (Idling speed)				820...940 rpm1)	=> Page 23

1) Up-to-date specifications:

=> Exhaust emissions test binder

Significance of figures in 8-digit number block, display zone 4 -Operating condition of Lambda regulation-

Significance when display = 1								
1	2	3	4	5	6	7	8	Operating condition of Lambda regulation
1								Fault entered in fault memory: Interrogate fault memory => Page 9 , Interrogating and erasing fault memory
	0							Not allocated
		0						Not allocated
			1					Restricted operation mode
				1				Lambda regulation at limit
					1			Lambda regulation active
						1		Lambda probe functioning
							1	Mixture status: ▪ Display 0 = lean mixture ▪ Display 1 = rich mixture

Notes on 8-digit number block:

- If the 4th bit is set to 1 (restricted operation mode), Lambda regulation is presently regulating in a constant load range (e.g. idling or driving at constant engine speed).
- Normally the 8th bit (mixture status) should fluctuate constantly between "0" and "1".

- If the 5th position is set to 1 (Lambda regulation at limit), you can determine in which direction Lambda regulation has reached its limit by checking the 8th position (mixture status).
- If Lambda regulation remains at a limit for a certain time, regardless whether rich or lean, a fault will be entered in the fault memory. The first position will be set to 1.
- If the 8th position is constantly set to 1, Lambda regulation is at the limit in the direction of weakening, but the Lambda probe is still measuring a rich mixture.

Volkswagen AG. Volkswagen AG does not guarantee or accept any liability with respect to the correctness of information in this document. Copyright by Volkswagen AG. Protected by copyright. Copying for private or commercial purposes, in part or in whole, is not permitted unless authorised by Volkswagen AG.
satelettronica

- If the 8th position is constantly set to 0, Lambda regulation is at the limit in the direction of enriching, but the Lambda probe is still measuring a lean mixture.
- The functions of the Lambda probe and Lambda regulation are contraposed; i.e. when the Lambda probe registers "rich", Lambda regulation must weaken the mixture, and when the Lambda probe registers "lean", Lambda regulation must enrich the mixture.
- Lambda regulation cannot be switched off manually.

Note:

Measured value block 21 is for information only and has no relevance for fault-finding in the workshop.

Display group 21 -Operating condition- Adaption condition of throttle valve control part						
▪ Engine running at idling speed						
Read measured value block 21			⇒	[Itrif] Indicated on display		
xxxxxxxx	xxx %	xxx %	xxx %			
1	2	3	4	[Itrif] Display zones	Specification	Evaluation
				Throttle valve max. position	0...20 %	---
			Throttle valve emergency running position		70...100 %	---
		Throttle valve min. position			70...100 %	---
	Operating condition of throttle valve control part				00000000	=> Page 28

Display group 22 -Operating condition- Position of camshaft relative to crankshaft						
▪ Engine running at idling speed						
Read measured value block 22			⇒	[Itrif] Indicated on display		
xxxx rpm	xxx mg/H	xx	xx			
1	2	3	4	[Itrif] Display zones	Specification	Evaluation
				Number of tooth on the crankshaft sender wheel when the Hall sender signal changes from + to -	86...90	---
			Number of tooth on the crankshaft sender wheel when the Hall sender signal changes from - to +		26...30	---
		Air mass drawn in (engine load)			76...164 mg/H	=> Page 24
	Engine speed (Idling speed)				820...940 rpm1)	=> Page 23

1) Up-to-date specifications:

=> Exhaust emissions test binder

Notes on display zones 3 and 4:

- The engine speed sender (G28) on the crankshaft transmits both an engine speed signal and a reference mark signal. The reference mark signal is generated by a gap in the sender wheel.
- The Hall sender (G40) rotor ring on the camshaft has a 180°division so that for one half of each camshaft revolution it covers the window on the Hall sender and for the other half-revolution the window is exposed.
- To synchronise the components when starting, the engine control unit records the instant when the rotor ring begins to cover the window (signal change from - to +) and the instant when it begins to expose the window (signal change from + to -).
- When the reference mark signal on the crankshaft is detected, the engine control unit counts the number of teeth on the crankshaft-mounted sender wheel. As soon as it has counted between 26 and 30 teeth after the gap, the signal sent by the Hall sender on the camshaft should change from - to + (rotor ring begins to cover window). After between 86 and 90 teeth, with the crankshaft already making its second revolution, the Hall sender signal should change from + to - (rotor ring begins to expose window).
- If the signal does not change within the tooth ranges specified above, this may mean that the toothed belt has slipped.

Vehicles with air conditioning and high pressure sender (G65)

Display group 57 -Operating condition- Air conditioning compressor
▪ Engine running at idling speed

satelettronica

Read measured value block 57 ⇒				[Itrif] Indicated on display		
xxxx rpm	xxxx rpm	Text	xx %			
1	2	3	4	[Itrif] Display zones	Specification	Evaluation
				Duty cycle of air conditioning high pressure sender (G65): ▪ A/C compressor off ▪ A/C compressor on	1...5 % 10...70 %	---
				Operating condition of A/C compressor: ▪ A/C compressor off ▪ A/C compressor on	Compr.OFF Compr.ON	---
				Engine speed (idling speed specification) ▪ A/C compressor off ▪ A/C compressor on	820...940 rpm 860...980 rpm	---
				Engine speed (idling speed) ▪ A/C compressor off ▪ A/C compressor on	820...940 rpm 860...980 rpm	=> Page 23

1) Up-to-date specifications:

=> Exhaust emissions test binder

Note on display zone 2:

The specified engine speed from the engine control unit is displayed (temperature dependent internally calculated control unit value).

Notes on display zone 4:

- The duty cycle of the high pressure sender (G65) while A/C compressor is off provides no indication of the degree to which the air conditioning system is filled.
- In the event of fault "01013, Air cond.comp. load signal", a constant 25 % is displayed in display zone 4.
- Checking signal from and to air conditioner compressor =>Page 111 .

Display group 98 -Operating condition- Adapting throttle valve control part1)						
▪ Engine running at idling speed						
Read measured value block 98 ⇒				[Itrif] Indicated on display		
x.xx V	x.xx V	xxxxxxxx	xx			
1	2	3	4	[Itrif] Display zones	Specification	Evaluation
				Adaption condition of throttle valve control part	00	=> Page 37
				Operating condition of throttle valve control part	00000000	=> Page 28
		Throttle valve positioner potentiometer voltage			2.28...4.75 V	---
	Throttle valve potentiometer voltage				3.70...4.75 V	---

1) If the display group 098 is selected with ignition switched on (engine stationary) under function 04 "Basic setting", the engine control unit will be matched to the throttle valve control part => Page 106 .

Significance of figures in 2-digit number block, display zone 4 - Adaption condition of throttle valve control part

Significance when display = 1		
1	2	Throttle valve control part adaption condition
1		Fault occurred during throttle valve adaption: Interrogate fault memory => Page 9 , Interrogating and erasing fault memory
	1	Throttle valve control part is being adapting

Display group 99 -Operating condition- Lambda regulation	
▪ Engine running at idling speed	
Read measured value block 99 ⇒	[Itrif] Indicated on display

satelettronica

xxxx rpm	xxx °C	xx %	xxxxxxxx			
1	2	3	4	[Itrif] Display zones	Specification	Evaluation
				Operating condition of Lambda regulation	0001011x	=> Page 35
			Lambda regulation		-25...25 %	---
		Coolant temperature			80...110 °C	=> Page 23
	Engine speed (Idling speed)				820...940 rpm1)	=> Page 23

1) Up-to-date specifications:

=> Exhaust emissions test binder

Protected by copyright. Copying for private or commercial purposes, in part or in whole, is not permitted unless authorised by Volkswagen AG. Volkswagen AG does not guarantee or accept any liability with respect to the correctness of information in this document. Copyright by Volkswagen AG.

satelettronica

24 - Mixture preparation, Injection

1 - Servicing injection system

1.1 - Servicing injection system

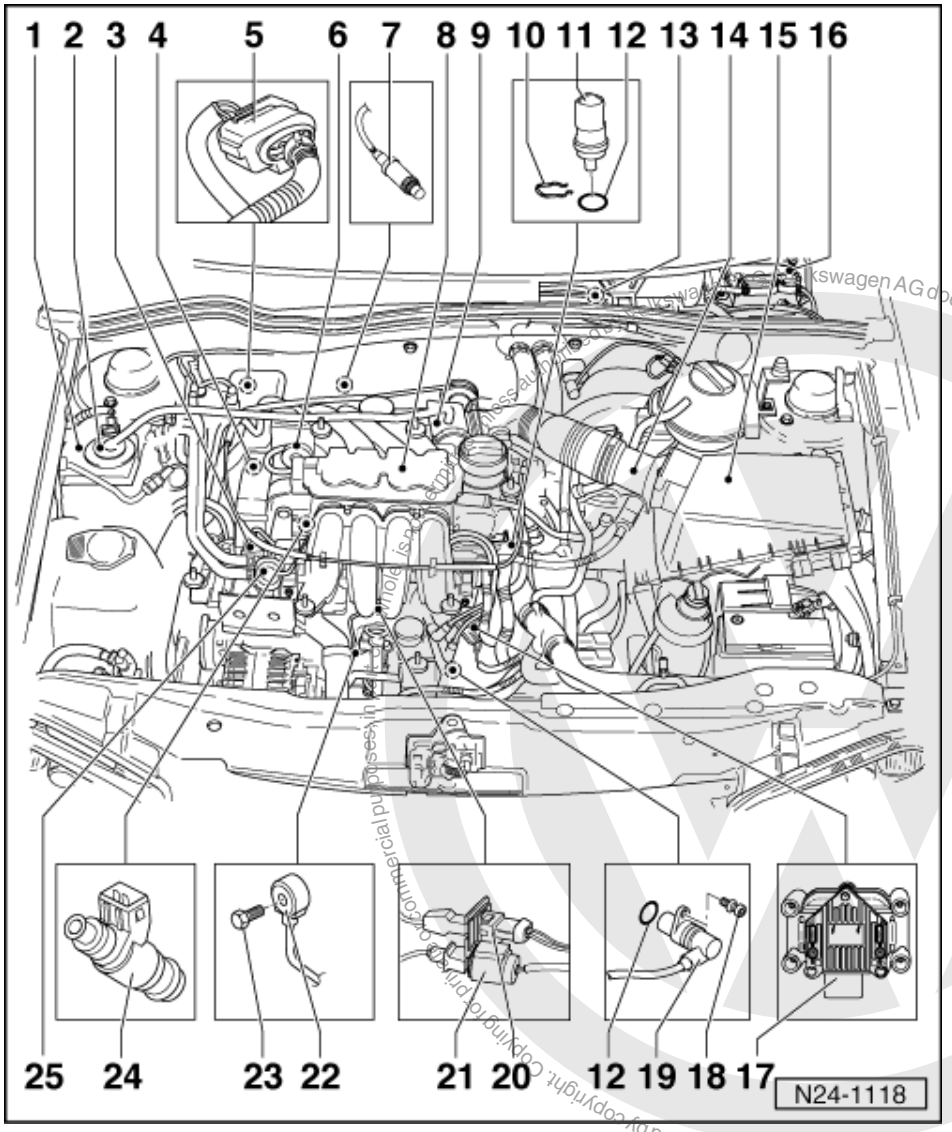

1.2 - Fitting locations overview

1 Activated charcoal filter
- Activated charcoal filter system

=> Repair group 20; Activated charcoal filter system; Servicing parts of the activated charcoal filter system
Activated charcoal filter system Servicing parts of the activated charcoal filter system

2 Activated charcoal filter solenoid valve 1 (N80)
- Checking => Page 16 , Final control diagnosis

Protected by copyright. Copying for private or commercial purposes, in part or in whole, is not permitted unless authorised by Volkswagen AG. Volkswagen AG does not guarantee or accept any liability with respect to the correctness of information in this document. Copyright by Volkswagen AG.
satelettronica

- Activated charcoal filter system

=> Repair group 20; Activated charcoal filter system; Servicing parts of the activated charcoal filter system
Activated charcoal filter system Servicing parts of the activated charcoal filter system

3 Connector
- Black, 3-pin
- For Hall sender (G40)
- Contacts gold plated

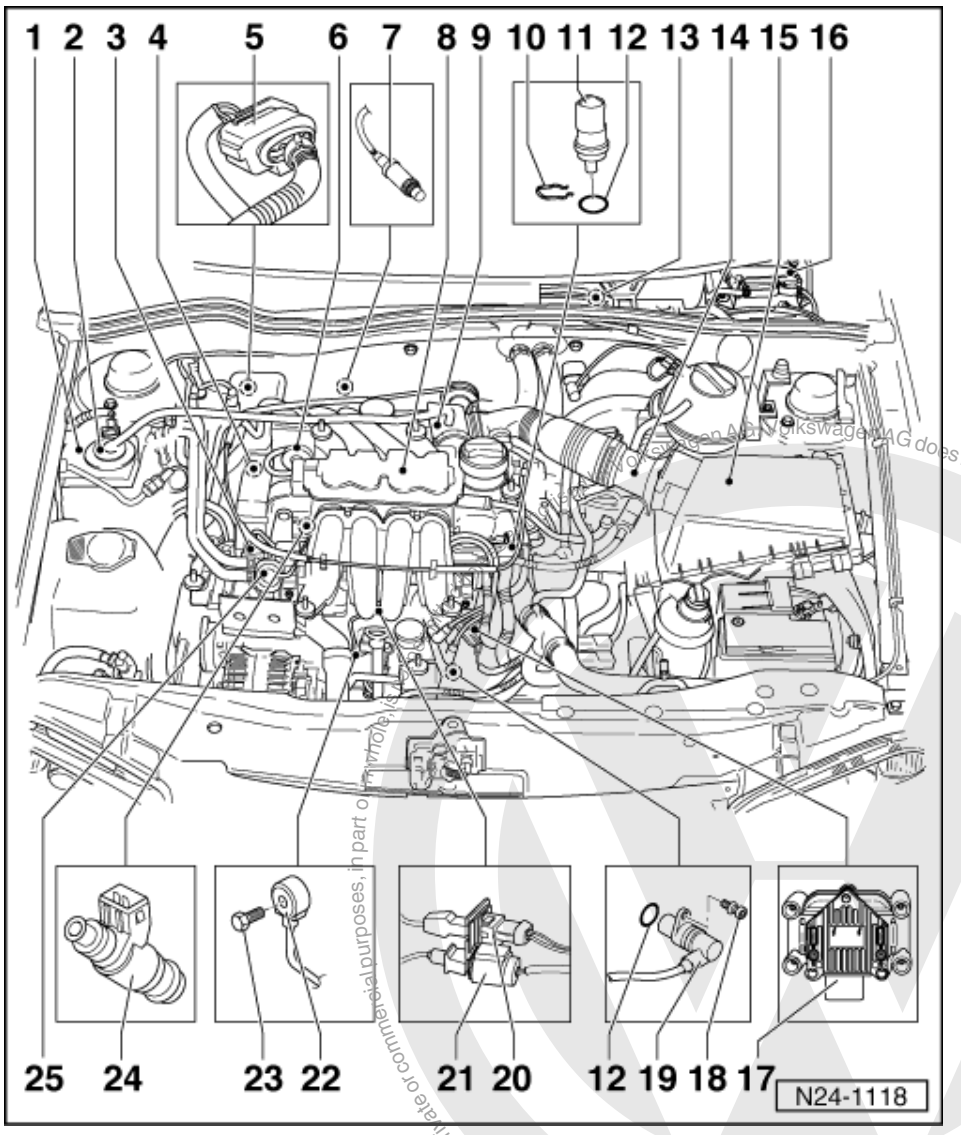

4 Hall sender (G40)
- => Page 127 , item 12

5 4-pin connector
- Brown
- For Lambda probe and Lambda probe heating
- Contacts 3 and 4 gold-plated

6 Intake manifold change-over valve (N156)

7 Lambda probe (G39), 50 Nm
- Fitting location: in exhaust manifold

8 Intake manifold - upper part

9 Throttle valve control part (J338)

10 Retaining clip
- Check seated securely

Copyright by Volkswagen AG. Volkswagen AG does not guarantee or accept any liability with respect to the correctness of information in this document. Copyright by Volkswagen AG.
Protected by copyright. Copying for private or commercial purposes, in part or in whole, is not permitted unless authorised by Volkswagen AG.
satelettronica

Protected by copyright. Copying for private or commercial purposes, in part or in whole, is not permitted unless authorised by Volkswagen AG. Volkswagen AG does not guarantee or accept any liability with respect to the correctness of information in this document.

11 Coolant temperature sender (G62)

- With coolant temperature gauge sender (G2)

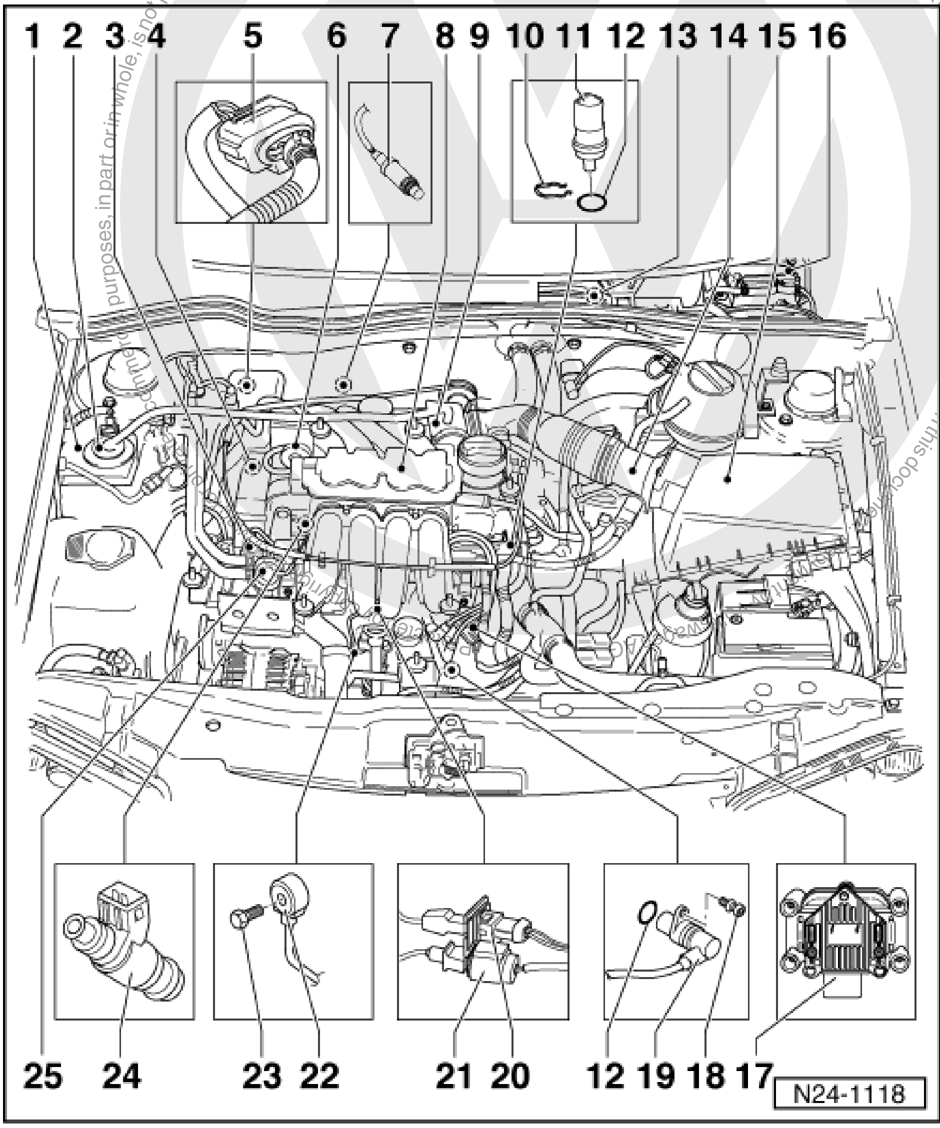

12 O ring

- Renew if damaged

13 Earth connection

- Fitting location: In plenum chamber

14 Air mass meter (G70) with intake air temperature sender (G42)

15 Air cleaner

16 Engine control unit

(Control unit for Simos injection and ignition system -J361)

- Disconnect or connect only with ignition switched off
- Checking voltage supply => Page 102
- Renew => Page 104
- When renewing engine control unit, adapt it to throttle valve control part=> Page 106

sateletronica

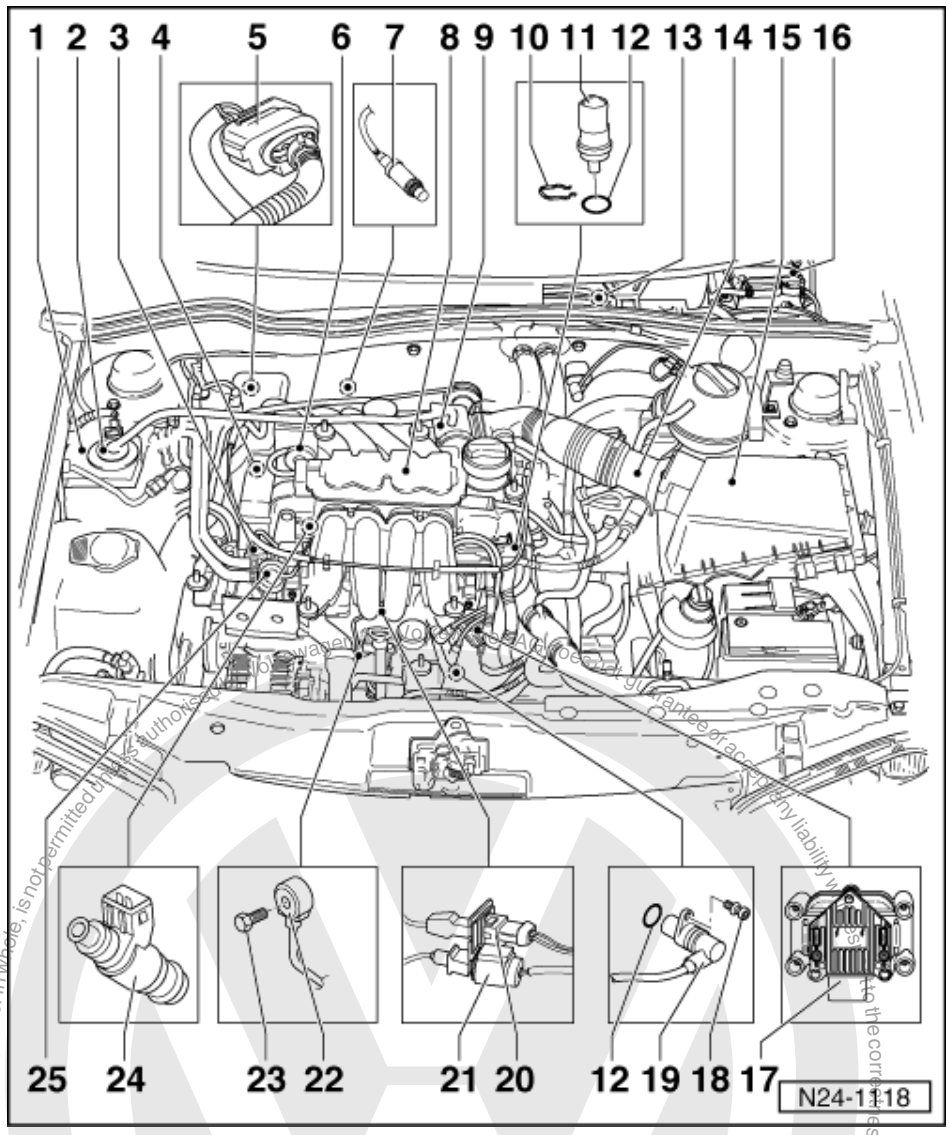

17 Ignition transformer (N152)
- With ignition cable identification, do not interchange
- => Page 124 , item 1

18 10 Nm

19 Engine speed sender (G28)

20 3 pin connector
- Black
- For knock sensor 1 (G61)

21 3 pin connector
- Grey/black
- For engine speed sender (G28)

22 Knock sensor 1 (G61)
- => Page 125 , item 5

23 20 Nm
- Tightening torque influences the function of the knock sensor

satelettronica

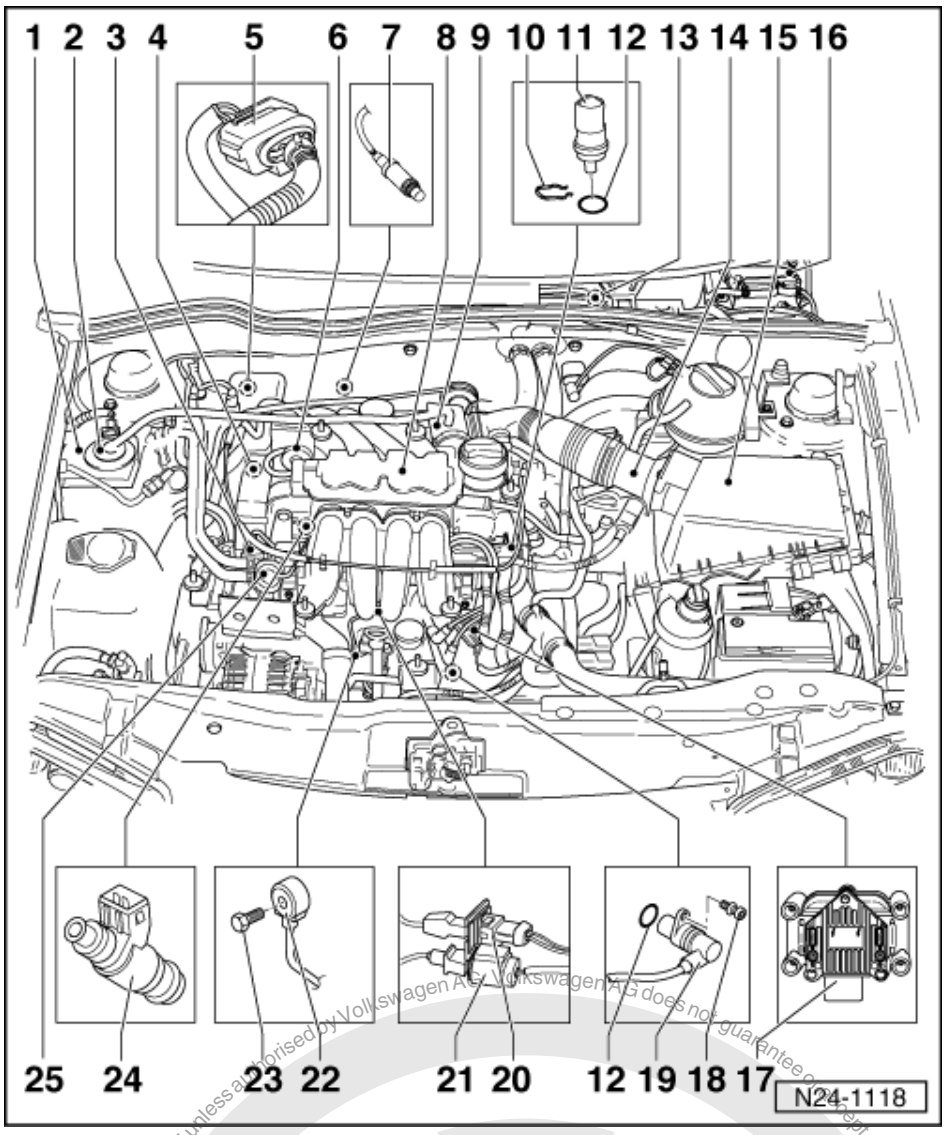

24 Injector (N30...N33)
25 Fuel pressure regulator

1.3 - General notes on injection

Servicing ignition part:

=> Repair group 28

- The engine control unit is equipped with self-diagnosis. Before carrying out repairs and fault finding the fault memories of all control units must be interrogated. This is necessary because various control units are interconnected via a data bus. Also the vacuum hoses and connections must be checked (unmetered air).
- Disconnecting and connecting the battery must only be done with the ignition switched off, otherwise the engine control unit could be damaged.
- Fuel hoses in engine compartment must only be secured with spring type clips. The use of clamp or screw type clips is not permissible.
- Components marked with * are checked via the self diagnosis
  => Page 9 , interrogating and erasing fault memory.
- Components marked with **can be checked with the final control diagnosis => Page 16 .
- For trouble-free operation of the electrical components, a voltage of at least 11.5 V is necessary.
- Do not use sealants containing silicone. Particles of silicone drawn into the engine, will not be burnt in the engine and damage the Lambda probe.

Protected by copyright. Copying for private or commercial purposes, in part or in whole, is not permitted unless authorised by Volkswagen AG. Volkswagen AG does not guarantee or accept any liability with respect to the correctness of information in this document. Copyright by Volkswagen AG.
satelettronica

- If the engine starts, runs for a short period and then stops after fault finding, repairs or component tests, then the fault may lie with the immobilizer which is blocking the engine control unit. The fault memory must be interrogated and if necessary the control unit matched:

=> Electrical system; Repair group 01; Immobilizer self-diagnosis; Adaption following renewal of engine control unit Immobilizer self-diagnosis Adaption following renewal of engine control unit

- During some checks it is possible that the control unit will recognise and store a fault. Therefore after completing all checks and repairs the fault memory must be interrogated and if necessary erased.
  => Page 9 , interrogating and erasing fault memory

Safety precautions =>Page 59

Rules for cleanliness => Page 59

Technical data => Page 59

Checking intake system for leaks (unmetered air) => Page 92 .

Checking engine operating mode => Page 98

1.4 - Removing and installing parts of the injection system

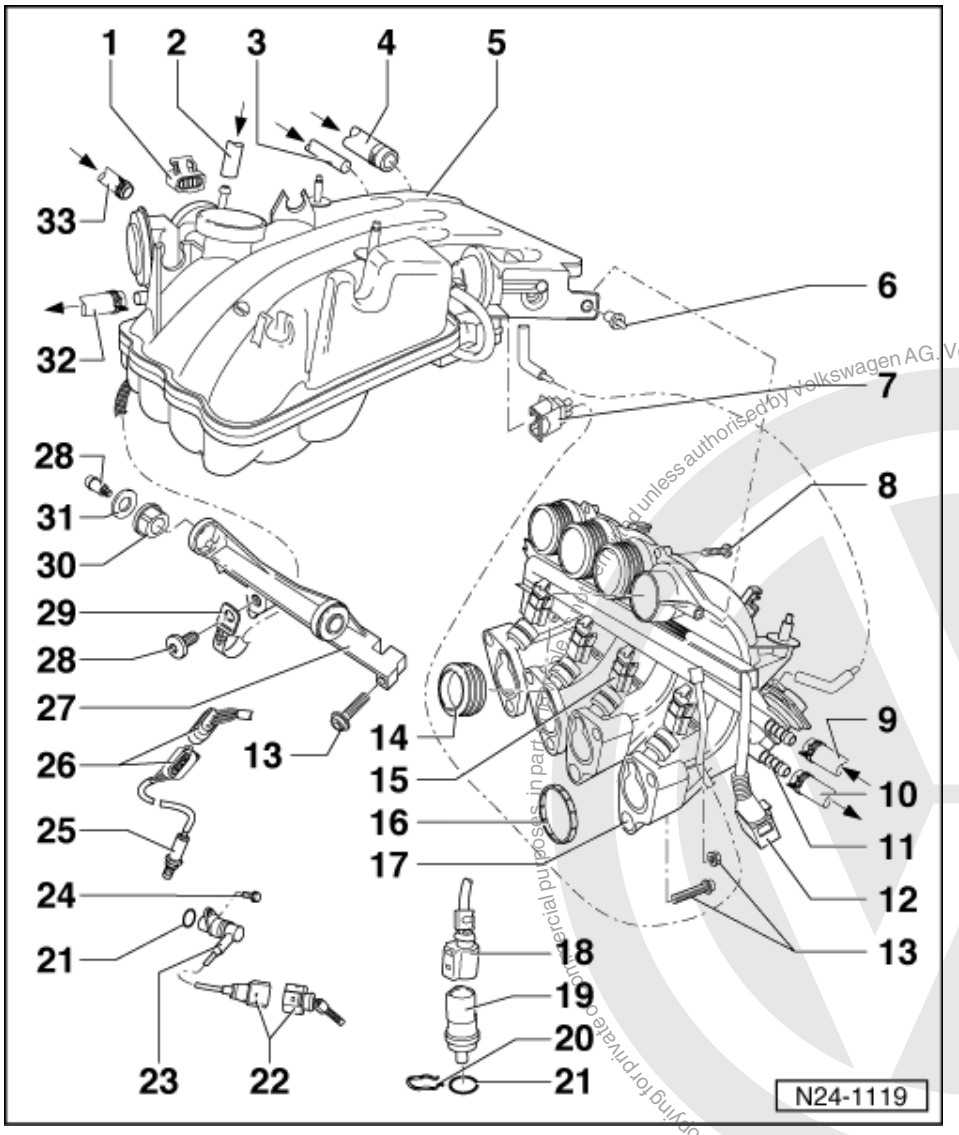

satelettronica
Protected by copyright. Copying for private or commercial purposes, in part or in whole, is not permitted unless authorised by Volkswagen AG. Volkswagen AG does not guarantee or accept any liability with respect to the correctness of information in this document. Copyright by Volkswagen AG.

Copyright by Volkswagen AG. Volkswagen AG does not guarantee or accept any liability with respect to the correctness of information in this document. Copying or distribution is not permitted unless authorised by Volkswagen AG.

1 Connector
- Black, 8 pin
- For throttle valve control part (J338)
- Contacts gold plated

2 From activated charcoal filter solenoid valve (N80)
- Activated charcoal filter system

=> Repair group 20; Activated charcoal filter system; Servicing parts of the activated charcoal filter system
Activated charcoal filter system Servicing parts of the activated charcoal filter system

3 Vacuum hose
- From intake hose
  => Page 57 , item 2

4 From brake servo
- Secure with spring-type clips

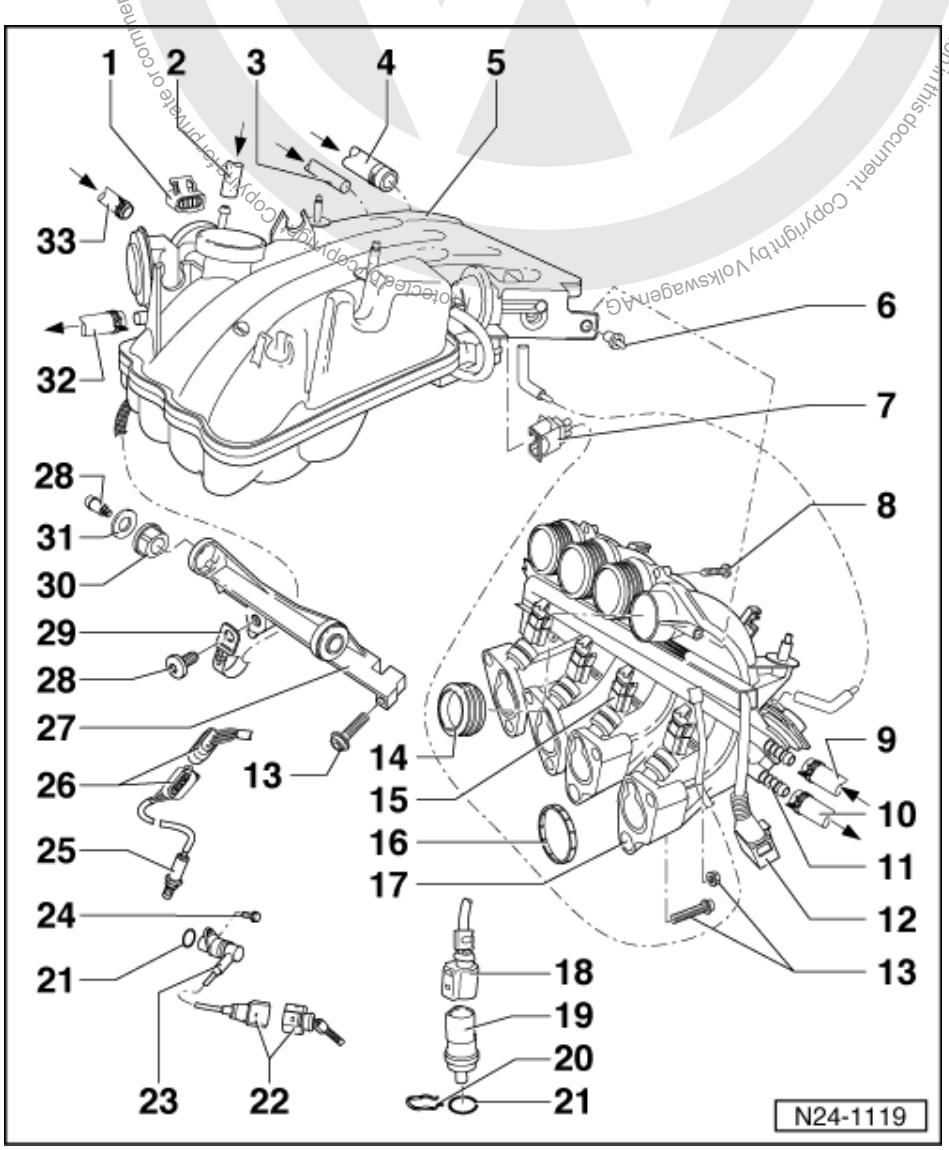

5 Intake manifold - upper part
- With twin path intake manifold change-over
- Dismantling and assembling => Page 52

6 Spreader rivet

7 Connector
- Black, 2-pin
- For twin path intake manifold change-over valve (N156)

satelettronica

8 3 Nm

9 Supply pipe/hose

- Black with white marks
- Secure with spring-type clips
- Check securely seated
- From fuel filter:

=> Repair Group 20; Removing and installing parts of fuel supply system; Removing and installing fuel tank with attachments and fuel filter Removing and installing parts of fuel supply system Removing and installing fuel tank with attachments and fuel filter

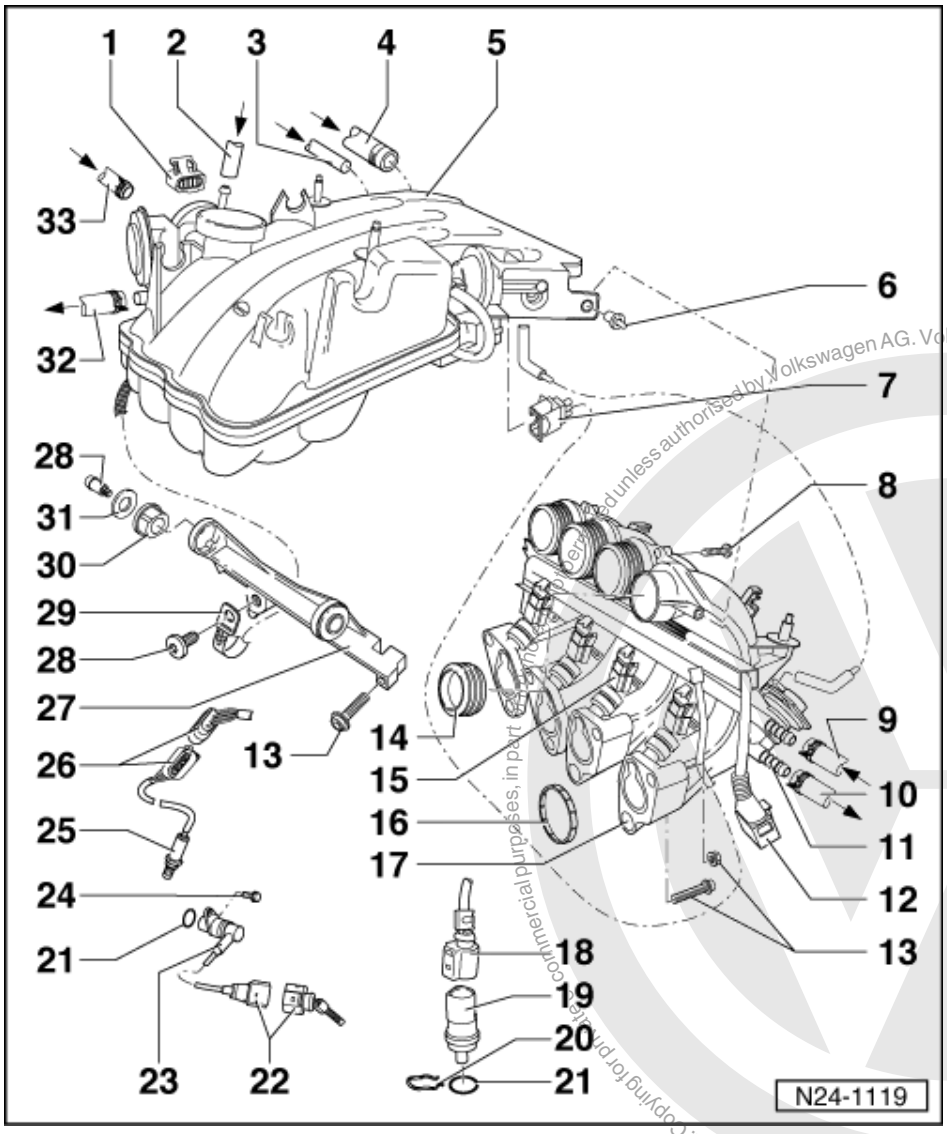

10 Return pipe

- Blue or with blue marking
- Secure with spring-type clips
- Check securely seated
- To the fuel delivery unit in fuel tank

=> Repair Group 20; Removing and installing parts of fuel supply system; Removing and installing fuel tank with attachments and fuel filter Removing and installing parts of fuel supply system Removing and installing fuel tank with attachments and fuel filter

11 Fuel rail with injectors

- Dismantling and assembling => Page 54

12 Connector

Protected by copyright. Copying for private or commercial purposes, in part or in whole, is not permitted unless authorised by Volkswagen AG. Volkswagen AG does not guarantee or accept any liability with respect to the correctness of information in this document. Copyright by Volkswagen AG.
satelettronica

- Black, 3-pin
- For Hall sender (G40)
- Contacts gold plated

13 15 Nm

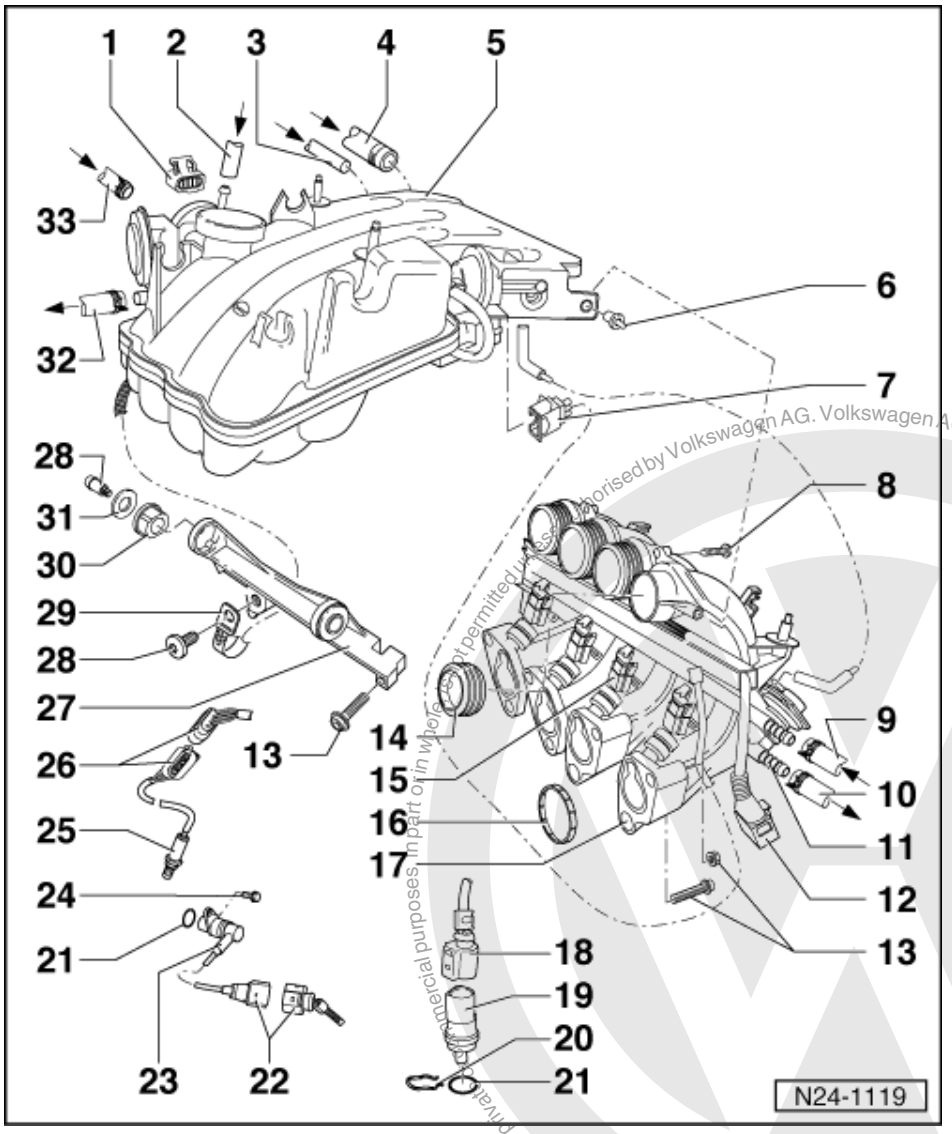

14 Seal

If there are no stops on the intake manifold lower part:

- Bond seal to the intake manifold lower part with adhesive D 000 801 and hardener D 000 802
- Identification
  => Fig. 1
- Renew if damaged

15 Connector

- Black, 2-pin
- For injector (N30...N33)

16 Seal

- Renew

17 Intake manifold - lower part

18 Connector

- Black, 4 pin
- For coolant temperature sender (G62) and coolant temperature gauge sender (G2)

Protected by copyright. Copying for private or commercial purposes, in part or in whole, is not permitted unless authorised by Volkswagen AG. Volkswagen AG does not guarantee or accept any liability with respect to the correctness of information in this document. Copyright by Volkswagen AG.
satelettronica

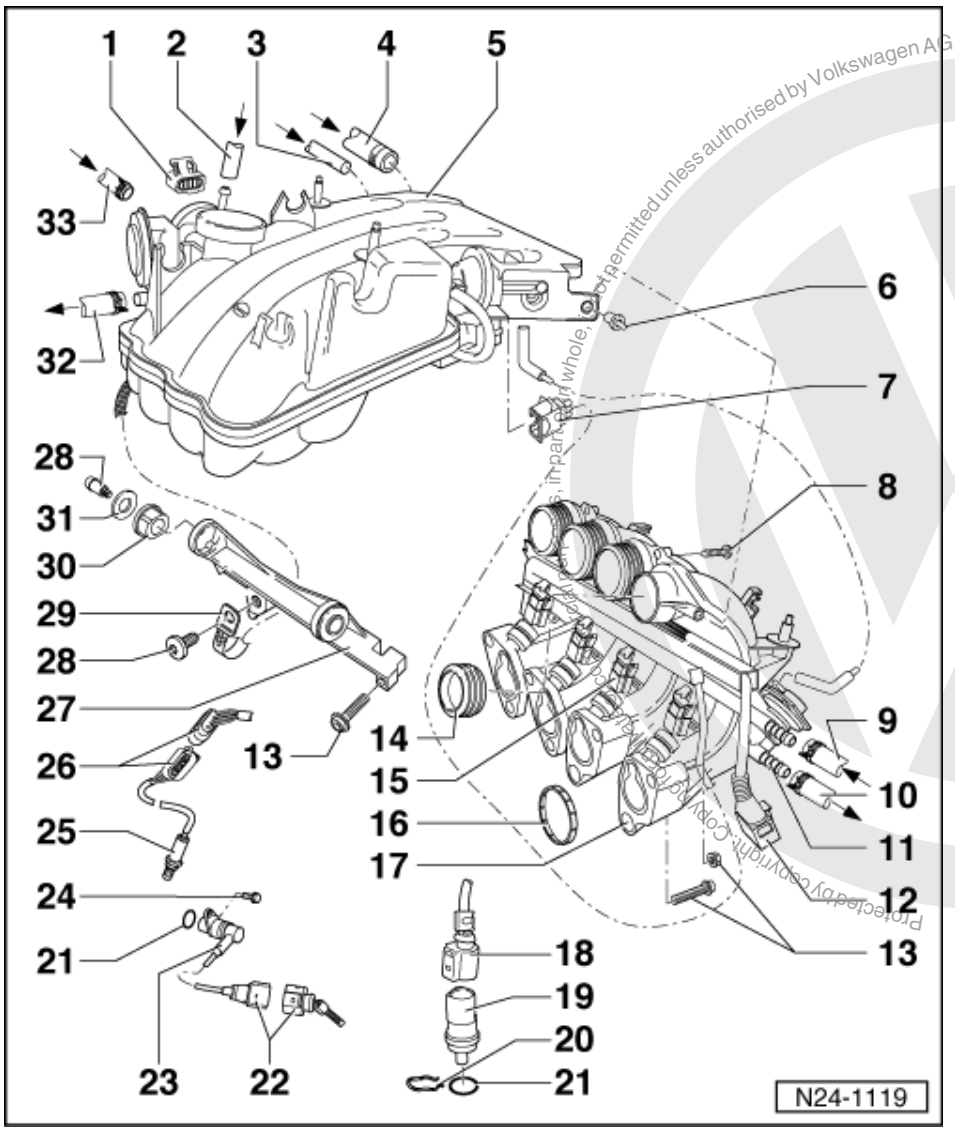

19 Coolant temperature sender (G62)*

- Fitting location => Page 39 , fitting location overview
- Green
- For engine control unit
- With coolant temperature gauge sender (G2)
- Contacts gold plated
- Checking => Page 73
- If necessary release pressure in cooling system before removing

20 Retaining clip

- Check seated securely

21 O ring

- Renew if damaged

22 3 pin connector

- Fitting location => Page 39 , engine compartment overview
- Grey/black
- For engine speed sender (G28)

Protected by copyright. Copying for private or commercial purposes, in part or in whole, is not permitted unless authorised by Volkswagen AG. Volkswagen AG does not guarantee or accept any liability with respect to the correctness of information in this document. Copyright by Volkswagen AG.
satelettronica

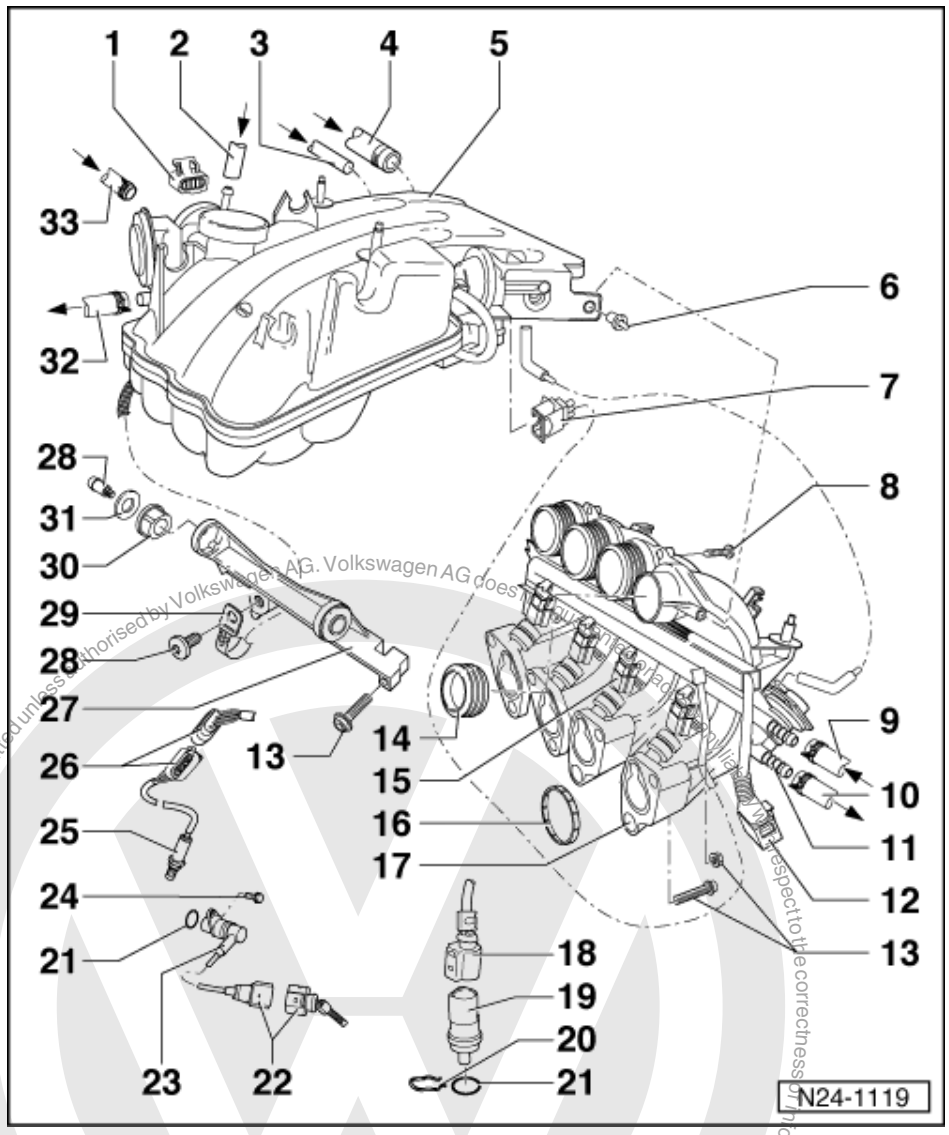

23 Engine speed sender (G28)*

- Fitting location => Page 39 , engine compartment overview
- Checking => Page 81

24 10 Nm

25 Lambda probe (G39)*, 50 Nm

- Fitting location => Page 39 , engine compartment overview
- Remove and install with Lambda probe open ring spanner set 3337
- Grease only the threads with "G 052 112 A3"; "G 052 112 A3" must not get into the slots on the probe body
- Probe heating voltage supply via fuel pump relay (J17)
- Checking Lambda probe heating => Page 60
- Checking Lambda probe and Lambda regulation => Page 95

satelettronica

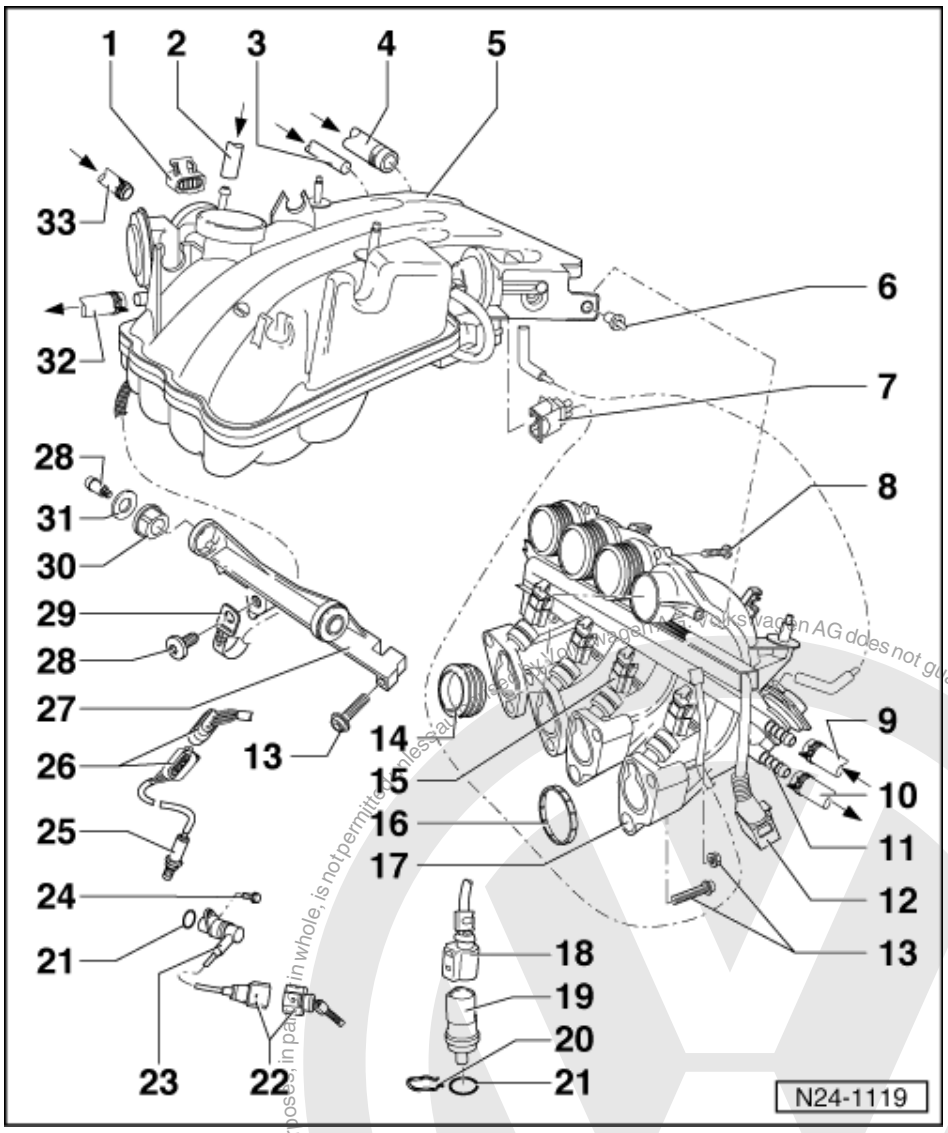

26 4-pin connector

- Fitting location => Page 39 , engine compartment overview
- Brown
- For Lambda probe and Lambda probe heating
- Contacts 3 and 4 gold-plated

27 Support

- Between intake manifold and cylinder head

28 8 Nm

29 Earth strap

30 Rubber bush

31 Washer

32 To heat exchanger

33 From expansion tank

Protected by copyright. Copying for private or commercial purposes, in part or in whole, is not permitted unless authorised by Volkswagen AG. Volkswagen AG does not guarantee or accept any liability with respect to the correctness of information in this document. Copyright by Volkswagen AG.
satelettronica

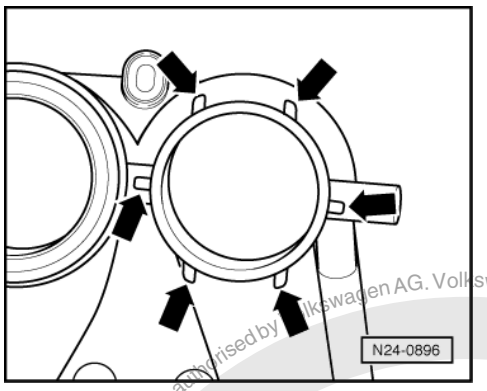

Fig.1 -> Identification: Stops for seal on intake manifold lower part -arrows-

If there are no stops on the intake manifold lower part the seals must be bonded to the intake manifold lower part with adhesive D 000 801 and hardener D 000 802.

1.5 - Dismantling and assembling intake manifold - Upper part

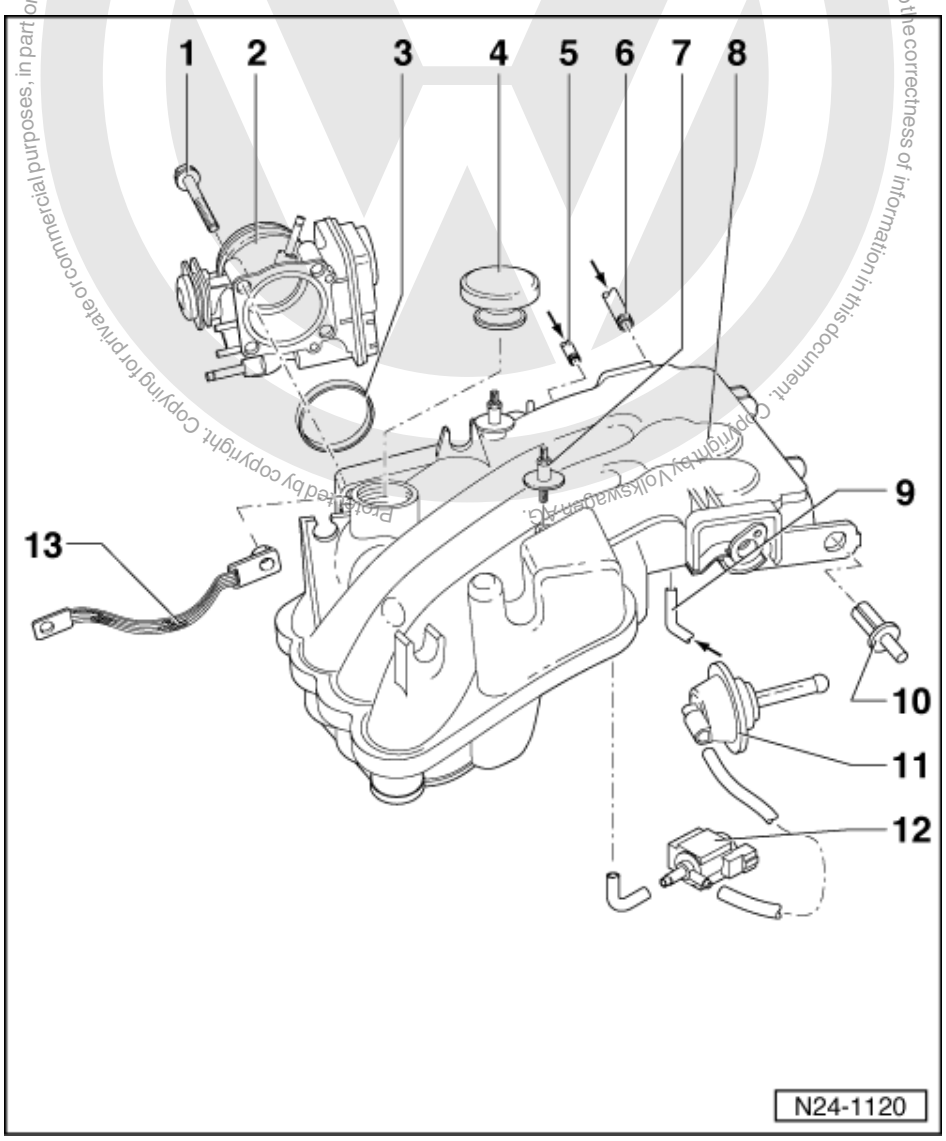

Protected by copyright. Copying for private or commercial purposes, in part or in whole, is not permitted unless authorised by Volkswagen AG. Volkswagen AG does not guarantee or accept any liability with respect to the correctness of information in this document. Copyright by Volkswagen AG.
satelettronica

1 8 Nm

2 Throttle valve control part (J338)*

- Connector contacts are gold-plated
- 8-pin connector
- Heated by coolant
- Checking => Page 65
- When renewing engine control unit, adapt it to throttle valve control part=> Page 106
- With cable disc for accelerator cable
- Adjusting accelerator cable:

=> Repair group 20; Accelerator mechanism: Adjusting accelerator cable Accelerator mechanism: Adjusting accelerator cable

3 Seal

- Renew if damaged

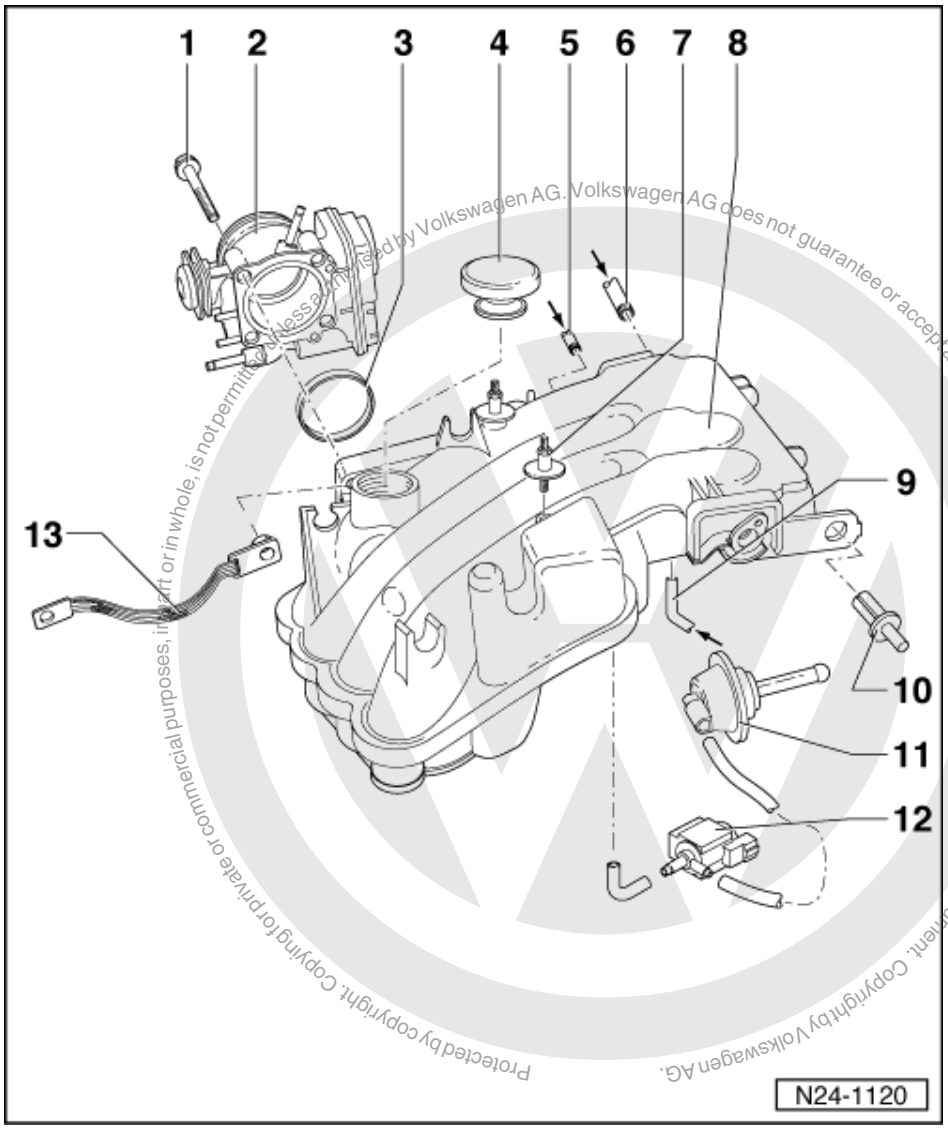

4 Pressure relief valve

- Protects the intake manifold from damage if pressure is too high

5 Vacuum hose

- From intake hose
  => Page 57 , item 2

6 From brake servo

- Secure with spring-type clips

7 Threaded mounting, 8 Nm

Protected by copyright. Copying for private or commercial purposes, in part or in whole, is not permitted unless authorised by Volkswagen AG. Volkswagen AG does not guarantee or accept any liability with respect to the correctness of information in this document. Copyright by Volkswagen AG.

satelettronica

8 Intake manifold - upper part
9 Vacuum hose
- From fuel pressure regulator
  => Page 56 , item 9

10 Spreader rivet
11 Vacuum control element
- Checking intake manifold change-over valve => Page 100

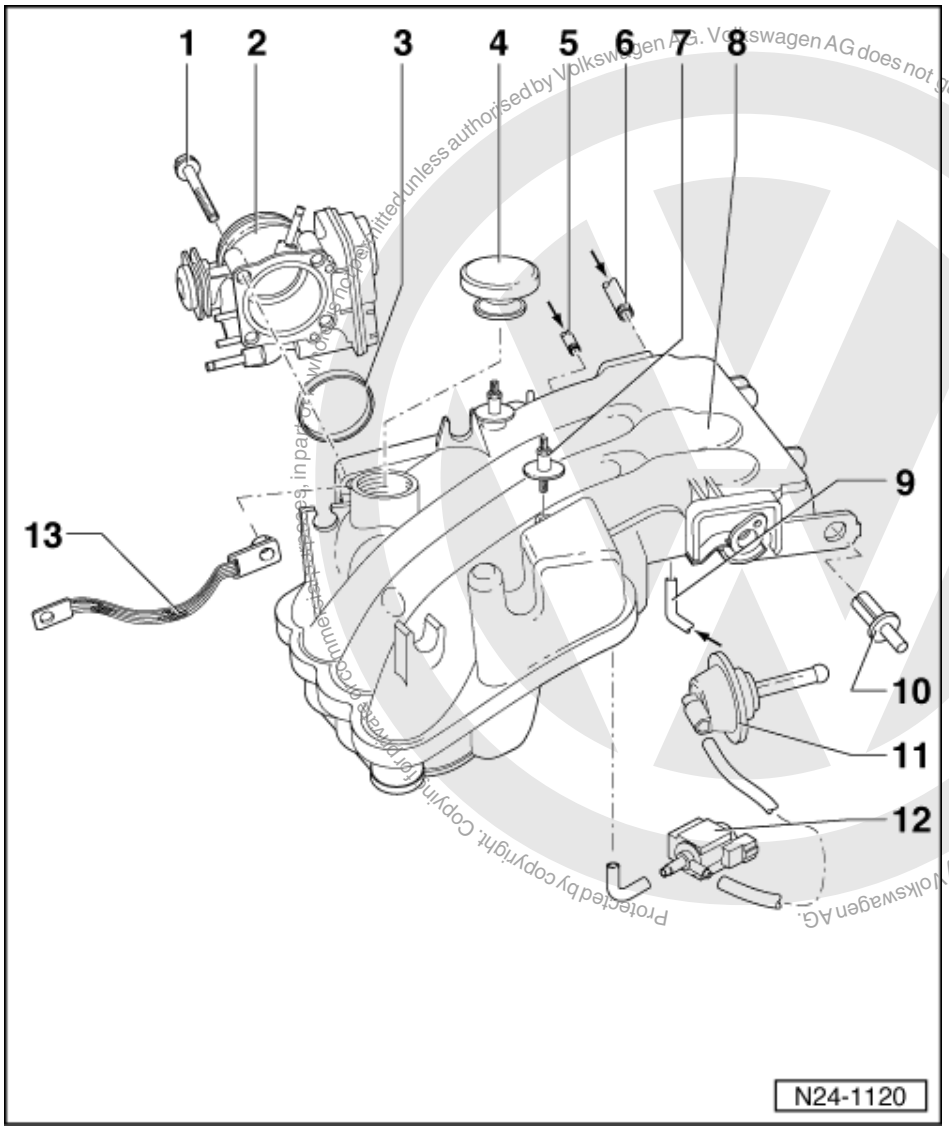

12 Intake manifold change-over valve (N156)*/**
- Checking intake manifold change-over valve => Page 100

13 Earth strap

Protected by copyright. Copyright by Volkswagen AG.
Volkswagen AG does not guarantee or accept any liability with respect to the correctness of information in this document. Copyright by Volkswagen AG.
satelettronica

1.6 - Dismantling and assembling fuel rail with injectors

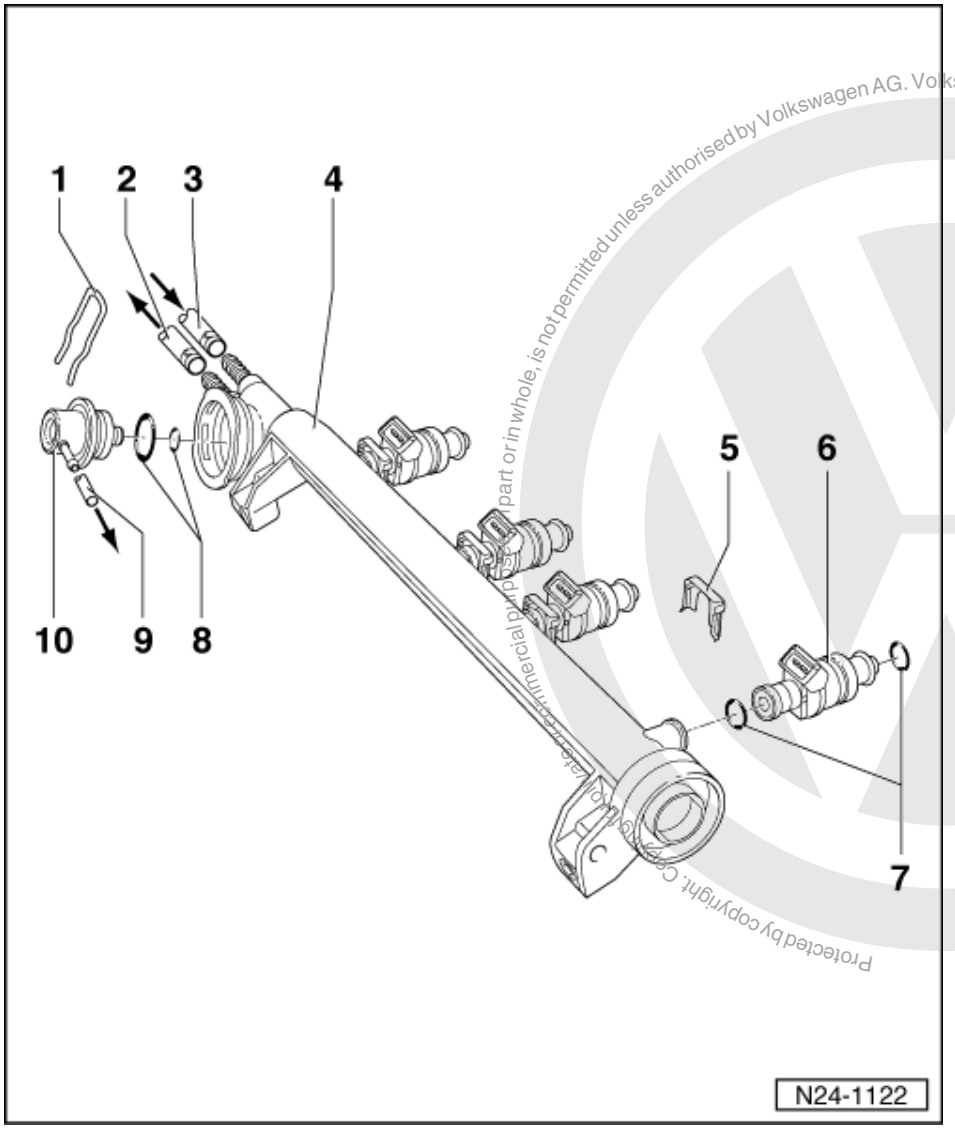

Protected by copyright. Copying for commercial purposes, in part or in whole, is not permitted unless authorised by Volkswagen AG. Volkswagen AG does not guarantee or accept any liability with respect to the correctness of information in this document. Copyright by Volkswagen AG.
satelettronica

1 Retaining clip
- Check seated securely

2 Return pipe
- Blue or with blue marking
- Secure with spring-type clips
- Check securely seated
- To the fuel delivery unit in fuel tank

=> Repair Group 20; Removing and installing parts of fuel supply system; Removing and installing fuel tank with attachments and fuel filter Removing and installing parts of fuel supply system Removing and installing fuel tank with attachments and fuel filter

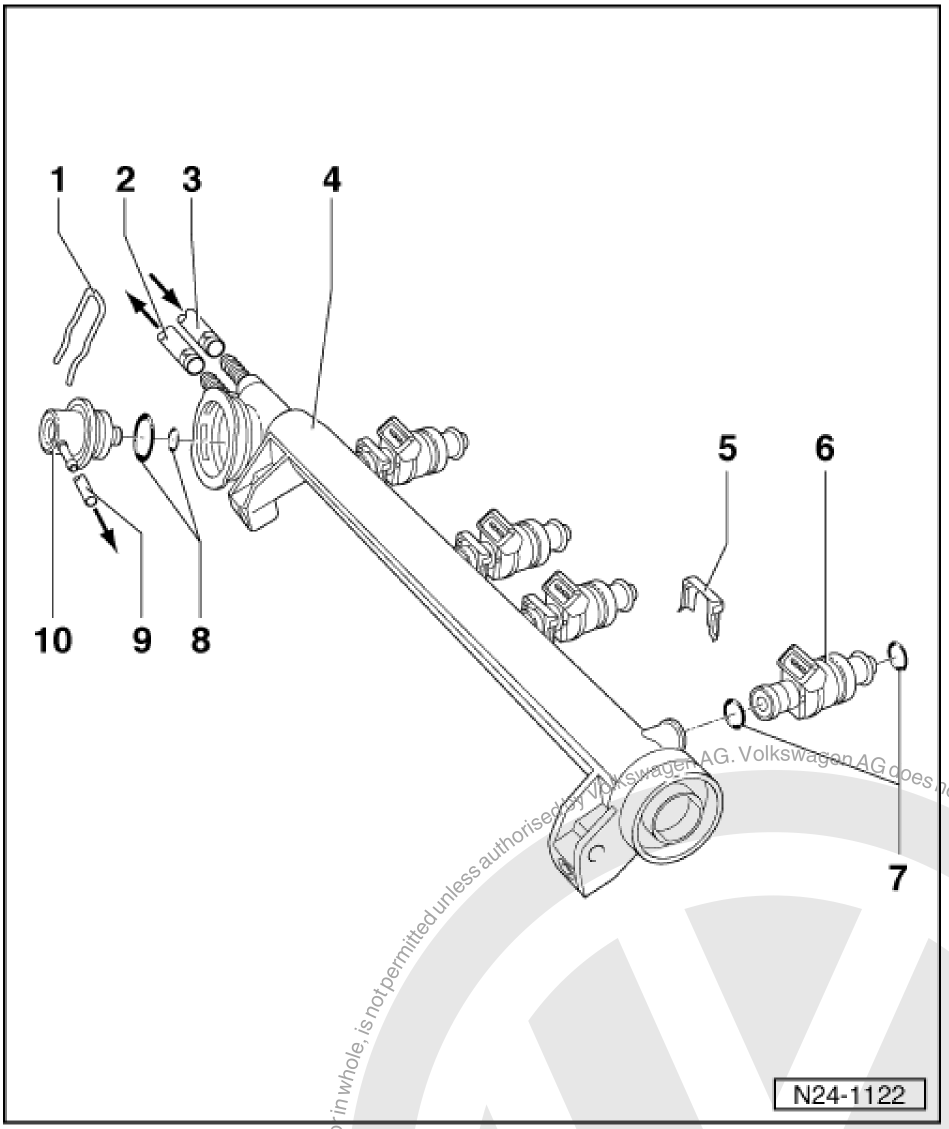

3 Supply pipe/hose
- Black with white marks
- Secure with spring-type clips
- Check securely seated
- From fuel filter:

=> Repair Group 20; Removing and installing parts of fuel supply system; Removing and installing fuel tank with attachments and fuel filter Removing and installing parts of fuel supply system Removing and installing fuel tank with attachments and fuel filter

4 Fuel rail

5 Retaining clip
- Ensure seated correctly at injector and fuel rail

6 Injectors (N30...N33)*
- Checking => Page 83
- Resistance 14.0...17.0 ω(at room temperature)

Protected by copyright. Copying for private or commercial purposes, in part or in whole, is not permitted unless authorised by Volkswagen AG. Volkswagen AG does not guarantee or accept any liability with respect to the correctness of information in this document. Copyright by Volkswagen AG.

satelettronica

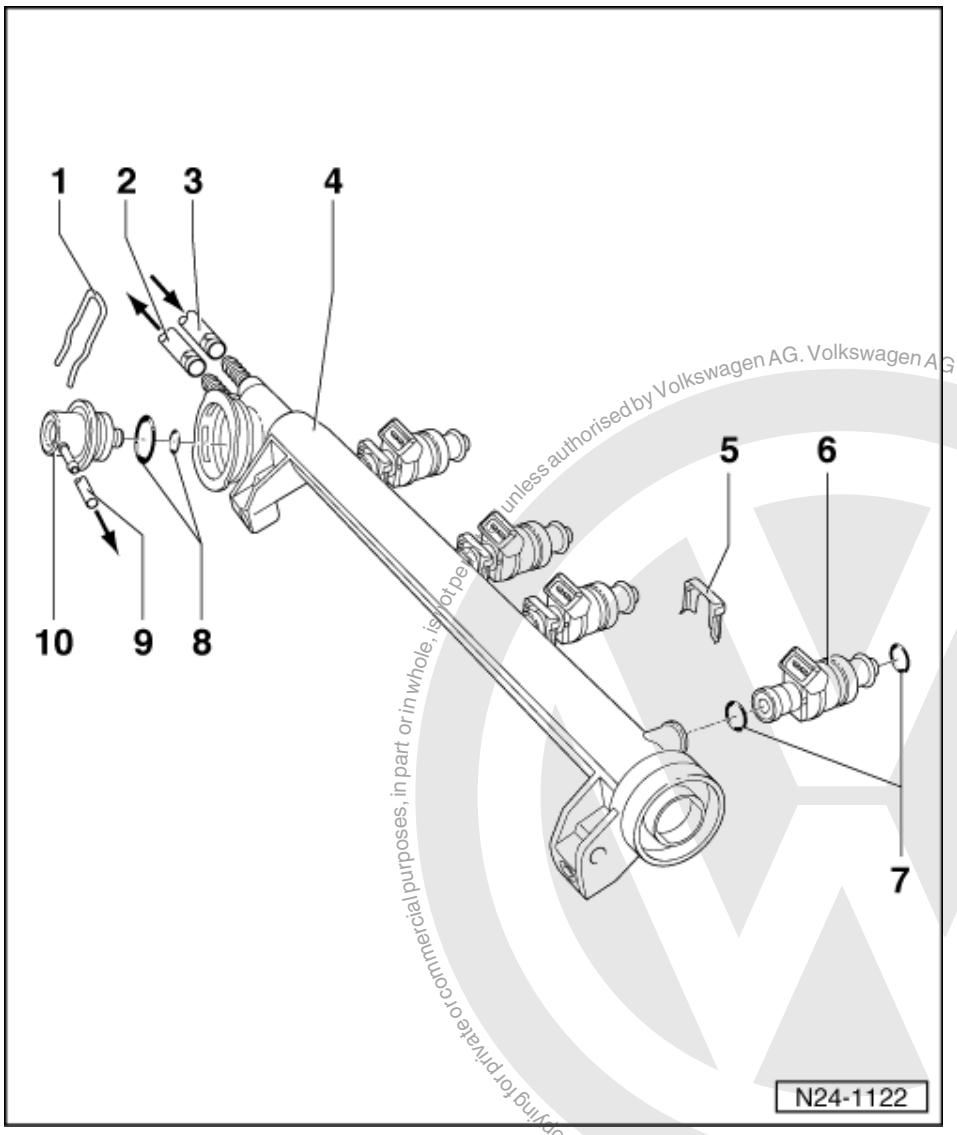

Protected by copyright. Copying for private or commercial purposes, in part or in whole, is not permitted unless authorised by Volkswagen AG. Volkswagen AG does not guarantee or accept any liability with respect to the correctness of information in this document. Copyright by Volkswagen AG.

satelettronica

7 O ring
- Renew
- Before installing moisten with clean engine oil

8 O ring
- Renew if damaged

9 Vacuum hose
- To intake manifold upper part =>
  => Page 53 , item 9

10 Fuel pressure regulator
- Checking => Page 89 , checking fuel pressure regulator and holding pressure

1.7 - Dismantling and assembling air cleaner

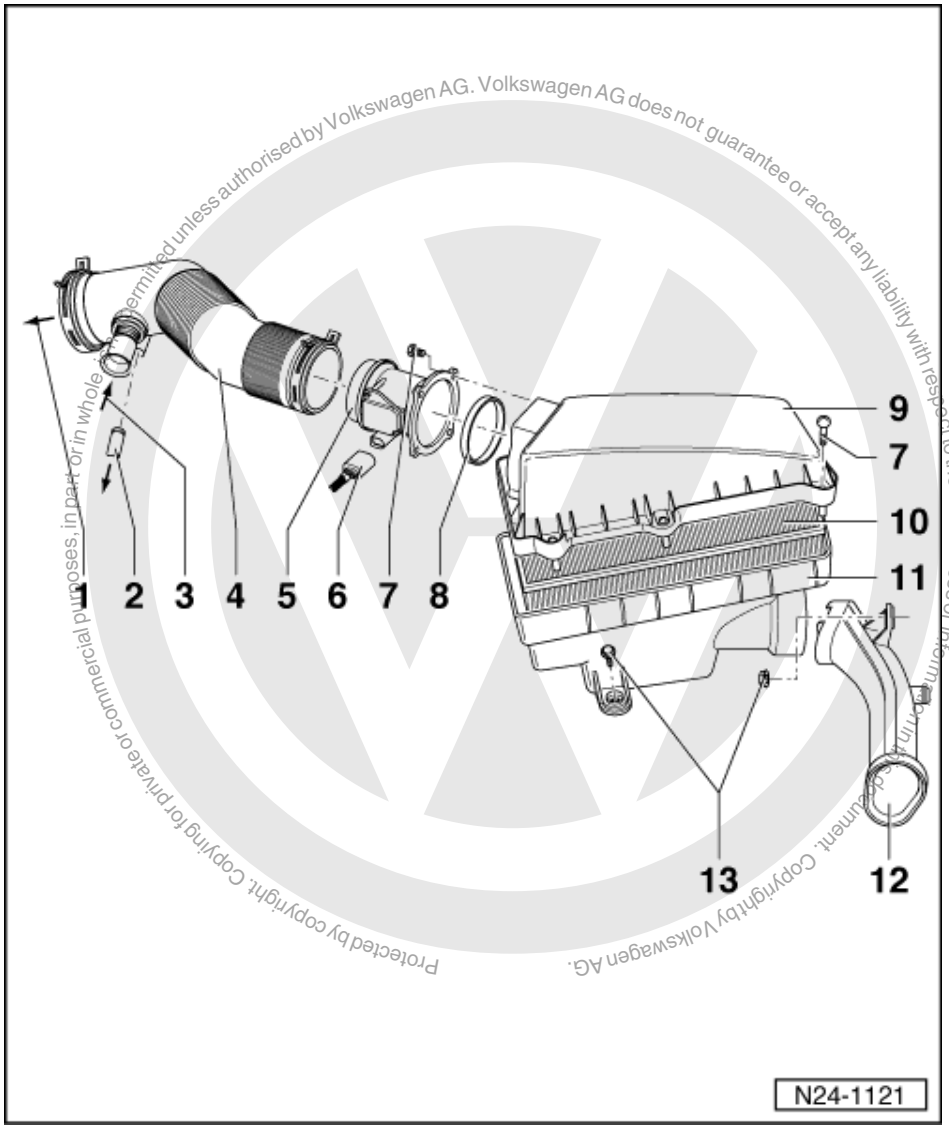

Protected by copyright. Copying for private or commercial purposes, in part or in whole, is not permitted unless authorised by Volkswagen AG. Volkswagen AG does not guarantee or accept any liability with respect to the correctness of information in this document. Copyright by Volkswagen AG.

1 To throttle valve control part (J338)
2 Vacuum hose
- To intake manifold =>
  => Page 52 , item 5

3 From breather housing on cylinder head cover
4 Intake hose
5 Air mass meter (G70)* with intake air temperature sender (G42)*
- Checking air mass meter => Page 63
- Checking intake air temperature sender => Page 77

satelettronica

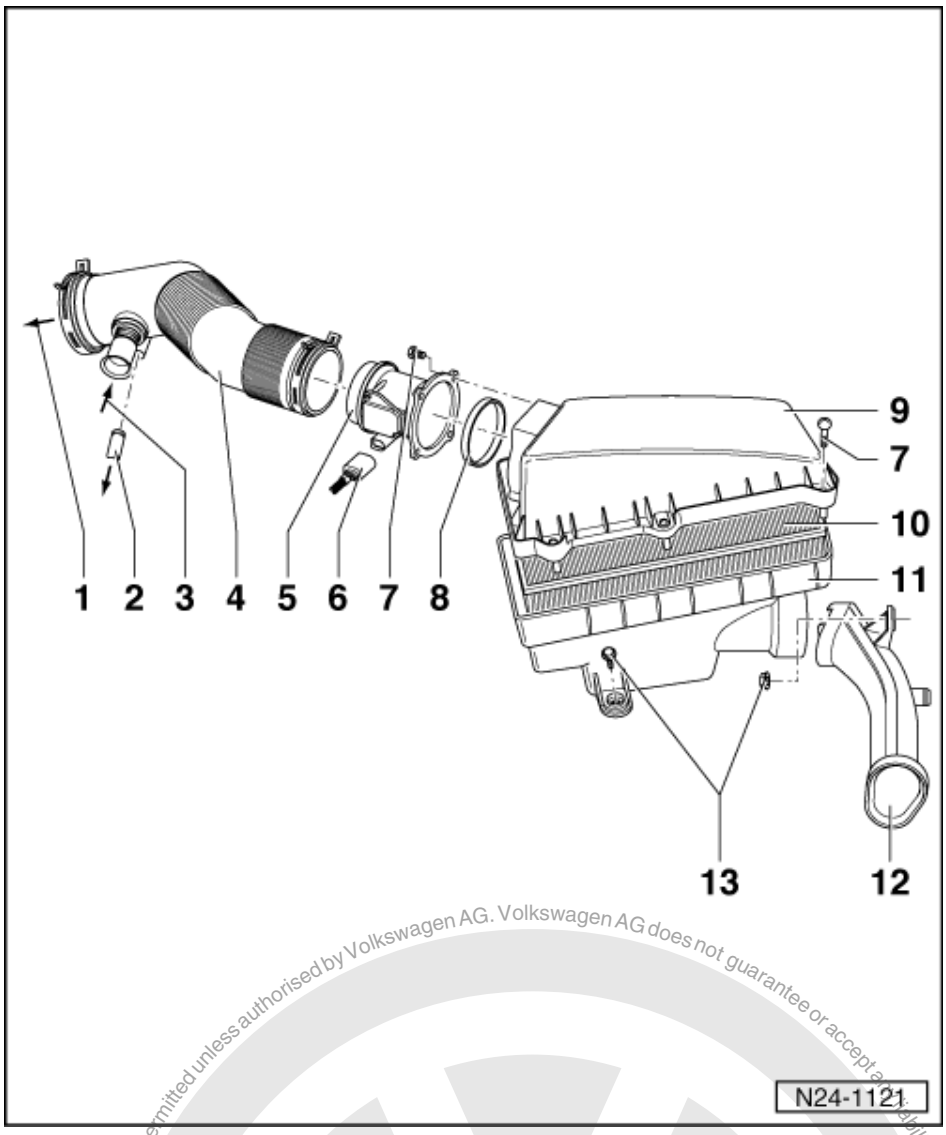

6 Connector
- Black, 4 pin

7 6 Nm

8 Seal
- Renew if damaged

9 Air cleaner upper part

10 Filter element

11 Air cleaner lower part

12 Air duct
- To lock carrier

13 10 Nm

Protected by copyright. Copying for private or commercial purposes, in part or in whole, is not permitted unless authorised by Volkswagen AG. Volkswagen AG does not guarantee or accept any liability with respect to the correctness of information in this document. Copyright by Volkswagen AG.

satelettronica

1.8 - Safety precautions

Warning!
Fuel system is under pressure! Before opening the system place a cloth around the connection. Then release pressure by carefully loosening the connection.

To prevent injuries to persons and/or damage to the fuel injection and ignition system, the following must be noted:

- Do not touch or disconnect ignition wiring when the engine is running or being turned at starter speed.
- The ignition must be switched off before connecting or disconnecting injection or ignition system wiring or tester cables.

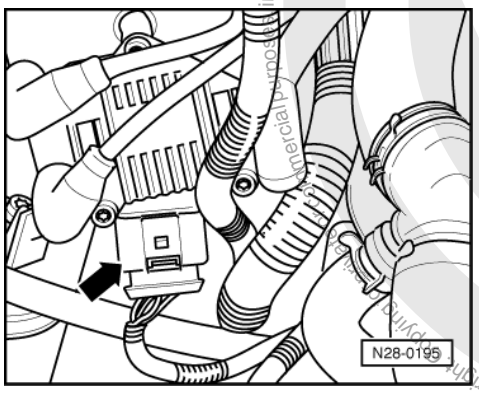

- If the engine is to be turned at starter speed, without starting:

- -> Pull 4 pin connector off ignition transformer (N152) -arrow-.

Observe following if test and measuring instruments are required during a test drive:

- Test and measuring instruments must be secured to rear seat and operated by a 2nd person from this location.

  If test and measuring instruments are operated from front passenger's seat and the vehicle is involved in an accident, there is a possibility that the person sitting in this seat may receive serious injuries when the airbag is triggered.

1.9 - Rules for cleanliness

When working on the fuel supply/injection system, pay careful attention to the following "5 rules":

- Thoroughly clean all unions and the adjacent areas before disconnecting.
- Place parts that have been removed on a clean surface and cover. Do not use fluffy cloths!
- Carefully cover opened components or seal, if the repair cannot be carried out immediately.
- Only install clean components:
  Only unpack replacement parts immediately prior to installation.
  Do not use parts that have been stored loose (e.g. in tool boxes etc.).
- When the system is open:
  Do not work with compressed air if this can be avoided.
  Do not move vehicle unless absolutely necessary.

1.10 - Technical data

Engine codes	AEH	AKL
Idling speed check		

satelettronica

Engine codes		AEH	AKL
Idling speed1)	rpm	820...9402)	820...9402)
Engine control unit3) System designation Part number4)		 Simos 2.1 6K0 906 019 AT	 Simos 2.1 6K0 906 019 HS
Engine governed speed	rpm	from ca. 6350	from ca. 6350

1) Not adjustable

2) Up-to-date specifications:

=> Exhaust emissions test binder

3) Replacing engine control unit => Page 102

4) For latest part number for engine control unit:

=> Parts microfiche

2 - Checking components

2.1 - Checking components

2.2 - Checking Lambda probe heating

Special tools, workshop equipment, testers, measuring instruments and auxiliary items required

- Hand multimeter V.A.G 1526 or multimeter V.A.G 1715
- Adapter set V.A.G 1594
- Test box V.A.G 1598/22
- Current flow diagram

Test conditions

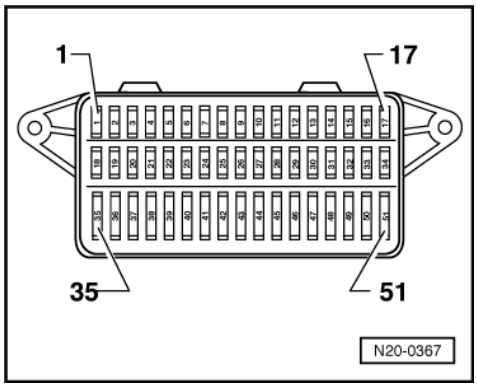

- -> The fuses 1, 31 and 36 must be OK.
- The battery voltage must be at least 11.5 V.
- Earth connection in plenum chamber OK.
- All electrical consumers, e.g. lights and rear window heating must be switched off.
- If the vehicle is equipped with an air conditioner, this must be switched off.
- Fuel pump relay must be OK =>Page 16 , final control diagnosis.

Protected by copyright. Copyright by Volkswagen AG.
Copyright by Volkswagen AG. Copying for private or commercial purposes, in part or in whole, is not permitted unless authorised by Volkswagen AG. Volkswagen AG does not guarantee or accept any liability with respect to the correctness of information in this document.
satelettronica

Test sequence

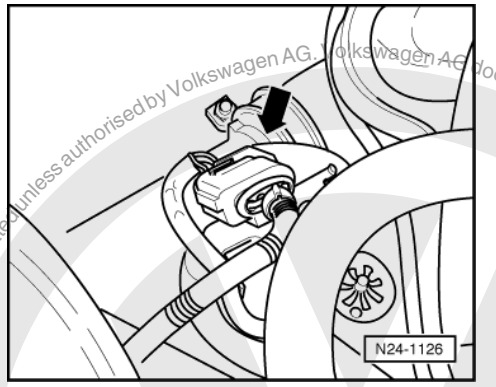

- -> Separate 4-pin connector (brown) to Lambda probe (G39) -arrow-.

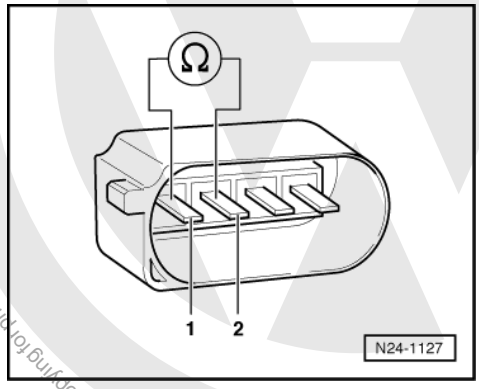

- -> Check resistance for probe heating at contacts 1 + 2 of Lambda probe connector.
  Specification: 2.5...10.0 ω (at room temperature).

Note:

The heating element resistance is approx. 2.5...10.0 ω at room temperature. Even slight increases in room temperature increase the resistance greatly.

If the specification is not obtained:

- Renew Lambda probe (G39)
  =>Page 49 , item 25 .

- Interrogate fault memory, if necessary, repair any faults and then erase fault memory => Page 9 , interrogating and erasing fault memory.

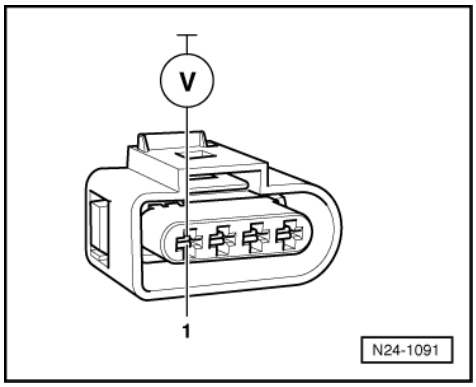

If the specification is obtained:

Protected by copyright. Copying for private or commercial purposes, in part or in whole, is not permitted unless authorised by Volkswagen AG. Volkswagen AG does not guarantee or accept any liability with respect to the correctness of information in this document. Copyright by Volkswagen AG.

satelettronica

- -> Set multimeter to measure voltage and connect to contact 1 (connector to engine control unit) and earth.
- Start engine and run at idling speed.
  Specification: 11.0...14.5 V

If the specification is not obtained:
- Switch off ignition.

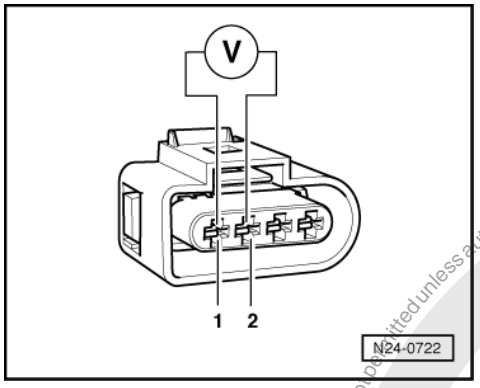

- Check wire for open circuit between 4-pin connector contact 1 and fuel pump relay (J17) referring to current flow diagram.
  Wire resistance: max. 1.5 ω

If the specification is obtained:
- -> Connect multimeter to measure voltage at contacts 1 + 2 (engine control unit connector).
  Specification 11.0...14.5 V
- Switch off ignition.

If the specification is not obtained:

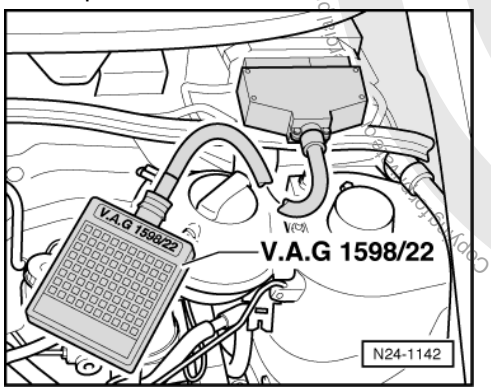

- -> Connect test box V.A.G 1598/22 to control unit wiring harness.

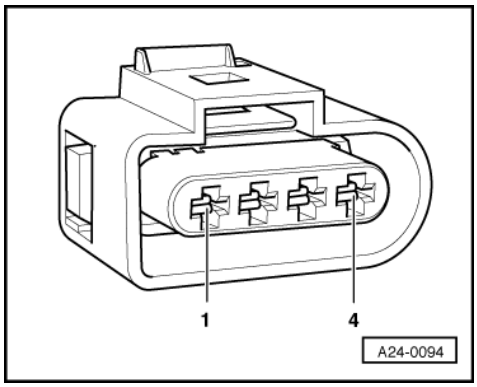

- -> Check wiring for open circuit between test box and 4-pin connector using current flow diagram:
  Contact 2 and test box socket 27
  Wire resistance: max. 1.5 ω

Protected by copyright. Copyright by Volkswagen AG.
Copyright in whole, is prohibited unless authorised by Volkswagen AG. Volkswagen AG does not guarantee or accept any liability with respect to the correctness of information in this document.
satelettronica

- Check wiring additionally for short to vehicle earth or battery positive.
  Specification: ∞ω

If the specification is obtained:

- Replace engine control unit
  => Page 104 .

2.3 - Checking air mass meter

Special tools, workshop equipment, testers, measuring instruments and auxiliary items required

- Hand multimeter V.A.G 1526 or multimeter V.A.G 1715
- Fault reader V.A.G 1551 (or vehicle system tester V.A.G 1552) with cable V.A.G 1551/3
- Adapter set V.A.G 1594
- Test box V.A.G 1598/22
- Current flow diagram

Test conditions

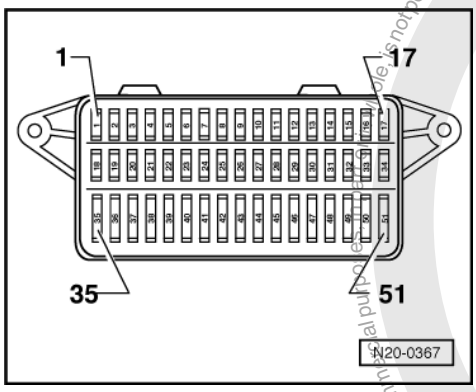

- -> The fuses 1, 31 and 36 must be OK.
- The battery voltage must be at least 11.5 V.
- Earth connection in plenum chamber OK.
- All electrical consumers, e.g. lights and rear window heating must be switched off.
- If the vehicle is equipped with an air conditioner, this must be switched off.
- Fuel pump relay must be OK =>Page 16 , final control diagnosis.
- On vehicles with an automatic gearbox the selector lever must be in P or N.
- Coolant temperature must be at least 80 °C, =>Display group 01, display zone 2.

Test sequence

- Connect fault reader V.A.G 1551 (V.A.G 1552). Start engine and select "Address word" 01 of engine control unit. When doing this the engine must be running at idling speed.
  (Connecting fault reader and selecting engine control unit => Page 2 .)

-> Indicated on display:

```
Rapid data transfer      HELP
Select function XX
```

- Press keys 0 and 8 for the function "Read measured value block" and confirm entry with Q key.

-> Indicated on display:

```
Read measured value block
Input display group number XXX
```

- Press keys 0, 0 and 1 for "Display group number 1" and confirm entry with Q key.

-> Indicated on display:

Protected by copyright. Copyright by Volkswagen AG.
Copyright by Volkswagen AG. Volkswagen AG does not guarantee or accept any liability with respect to the correctness of information in this document.
Reproduction of this document or any part thereof is not permitted unless authorised by Volkswagen AG.
satelettronica

(1...4 = Display zones)

```
Read measured value block 1
     1     2     3     4
```

- Check whether the coolant temperature is above 80 °C in display zone 2.
- Change to display group 2 as follows:
  V.A.G 1551: Press key 3
  V.A.G 1552: Press key ↑

-> Indicated on display:
(1...4 = Display zones)

```
Read measured value block 2
     1     2     3     4
```

Display zone 2 shows the intake air mass (milligrams per stroke).
Specification: 76...164 mg/H

- Press ⇒key.
- Press keys 0 and 6 for the "End output" function and confirm input with the Q key.
- Switch off ignition.

If the specifications are not attained or there is a fault relating to the air mass meter in fault memory:

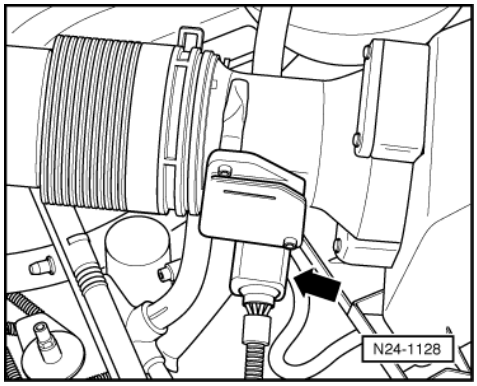

- -> Pull 4-pin connector off air mass meter (G70) -arrow-.

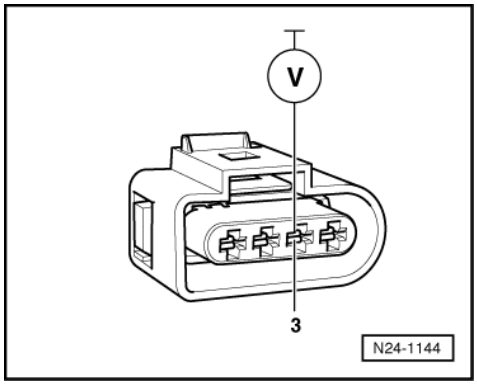

- -> Connect multimeter to measure voltage at contact 3 (engine control unit connector) + earth.
- Start engine and run at idling speed.
  Specification: 11.0...14.5 V
- Switch off ignition.
- If the voltage supply is OK, test the signal wire and earth wire => Page 65 .

If no voltage is present:

- Check wire for open circuit between contact 3 of 4-pin connector and fuel pump relay (J17) using current flow diagram.

Protected by copyright. Copyright by Volkswagen AG. Volkswagen AG does not guarantee or accept any liability with respect to the correctness of information in this document. Copying for private or commercial purposes, in part or in whole, is not permitted unless authorised by Volkswagen AG.
satelettronica

Wire resistance: max. 1.5 ω

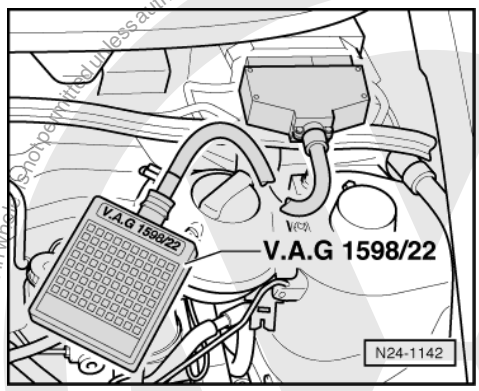

Testing signal wiring for air mass meter

-> Connect test box V.A.G 1598/22 to control unit wiring harness.

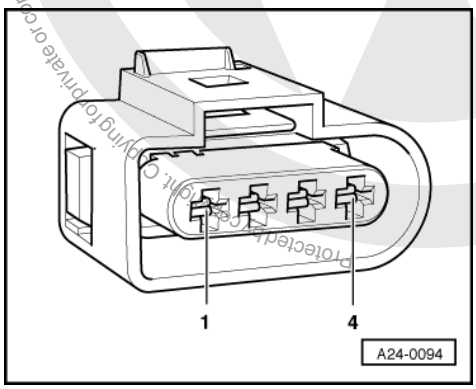

- -> Check wire for open circuit between test box and 4-pin connector using current flow diagram.
  Contact 1 and test box socket 13
  Contact 2 and test box socket 12
  Wire resistance: max. 1.5 ω
- Additionally check wires for short to one another, to vehicle earth and to battery positive.
  Specification: ∞ω

If no wiring fault is detected:

- Renew air mass meter (G70) with intake air temperature sender (G42) =>Page 57 , item 5 .
- Interrogate fault memory, if necessary, repair any faults and then erase fault memory => Page 9 , interrogating and erasing fault memory.

2.4 - Checking throttle valve control part

Components of the throttle valve control part (J338):
Throttle valve positioner (V60), throttle valve positioner potentiometer (G88), throttle valve potentiometer (G69) and idling switch (F60)

Notes:

- Only gold-plated contacts may be used when servicing the throttle valve control part connector contacts.

If the throttle valve control part is replaced, the following must be carried out:

- Adapt engine control unit to throttle valve control part => Page 106

satelettronica

- On vehicles with automatic gearbox: Adapt gearbox control unit:

=> Self-diagnosis for automatic gearbox 01M; Repair group 01; Performing self-diagnosis; Initiating basic setting Performing self-diagnosis Initiating basic setting

Special tools, workshop equipment, testers, measuring instruments and auxiliary items required

- Hand multimeter V.A.G 1526 or multimeter V.A.G 1715
- Fault reader V.A.G 1551 (or vehicle system tester V.A.G 1552) with cable V.A.G 1551/3
- Adapter set V.A.G 1594
- Test box V.A.G 1598/22
- Current flow diagram

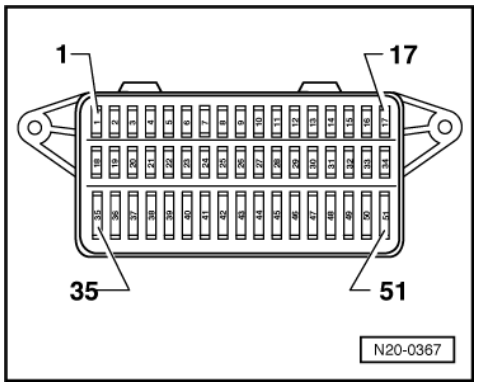

Check conditions

- -> Fuses 13 and 36 must be OK.
- The battery voltage must be at least 11.5 V.
- Earth connection in plenum chamber OK.
- Earth connection between throttle valve control part and cylinder head OK.
  => Page 50 , item 29
- All electrical consumers, e.g. lights and rear window heating must be switched off.
- If the vehicle is equipped with an air conditioner, this must be switched off.
- The throttle valve control part must not be damaged or dirty (carbonization).

Checking idling switch

- Connect the fault reader V.A.G 1551 (V.A.G 1552). Then switch ignition on and select engine control unit with the "Address word" 01.
  (Connecting fault reader and selecting engine control unit => Page 2 .)

-> Indicated on display:

```
Rapid data transfer      HELP
Select function XX
```

- Press keys 0 and 8 for the function "Read measured value block" and confirm entry with Q key.

-> Indicated on display:

```
Read measured value block
Input display group number XXX
```

- Press keys 0, 9 and 8 for "Display Group 98" and confirm entry by pressing Q.

-> Indicated on display:
(1...4 = Display zones)

```
Read measured value block 98
     1      2      3      4
```

- Observe display value of idling switch at idling speed in display zone 3.
  (8th position from left = idling switch)
  Specification: xxxxxxx0
- Slowly open throttle valve and observe value displayed in display zone 3.

Protected by copyright. Copying for private or commercial purposes, in part or in whole is not permitted unless authorised by Volkswagen AG. Volkswagen AG does not guarantee or accept any liability with respect to the correctness of information in this document. Copyright by Volkswagen AG.
satelettronica

Specification: xxxxxxx1

Significance of other figures in 8-digit number block
=> Page 28 .

If the specifications are not obtained:

- Perform check according to following table:

Appears on display	Possible fault cause	Fault elimination
Always 1	- Open circuit or wiring short to positive	- Continuation of check when displayed value is always 1 => Page 67
Always 0	- Wiring short to earth	- Continuation of check when displayed value is always 0 => Page 68

Continuation of check when displayed value is always 1

- Remove the intake hose between air mass meter and throttle valve control part.

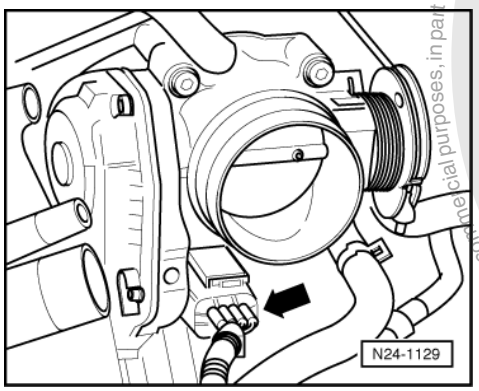

- -> Pull 8-pin connector off throttle valve control part -arrow-.

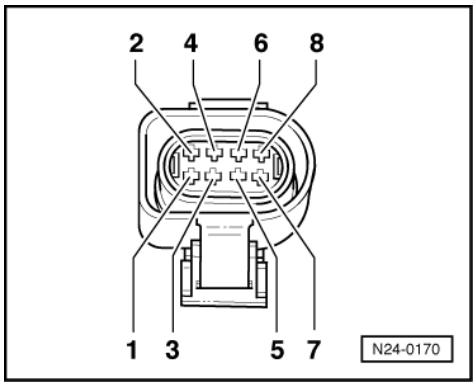

- -> Bridge connector contacts 3+7 with aux. cables from V.A.G 1594 and observe display.

If display jumps to idling:

- Press the ⇒key.
- Press keys 0 and 6 for the function "End output" and confirm entry with the Q key.
- Switch off ignition.
- Replace throttle valve control part (J338)
  =>Page 52 , item 2 .

Protected by copyright. Copying for private or commercial purposes, in part or whole, is not permitted unless authorised by Volkswagen AG. Volkswagen AG does not guarantee or accept any liability with respect to the correctness of information in this document. Copyright by Volkswagen AG.
satelettronica

- Interrogate fault memory, if necessary, repair any faults and then erase fault memory => Page 9 , interrogating and erasing fault memory.
- Adapt engine control unit to throttle valve control part => Page 106 .

If display remains at 1:

- Press the ⇒key.
- Press keys 0 and 6 for the function "End output" and confirm entry with the Q key.
- Switch off ignition.
- Check voltage supply of throttle valve control part and wiring to control unit => Page 72 .

If the voltage supply and wiring is OK:

- Replace engine control unit
  => Page 104 .

Continuation of check when when displayed value is always 0

- Remove the intake hose between air mass meter and throttle valve control part.

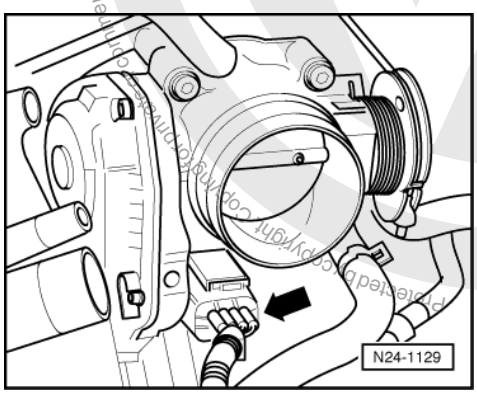

- -> Pull 8-pin connector off throttle valve control part -arrow-.

If display jumps to 1:

- Press the ⇒key.
- Press keys 0 and 6 for the function "End output" and confirm entry with the Q key.
- Switch off ignition.
- Replace throttle valve control part (J338)
  =>Page 52 , item 2 .
- Interrogate fault memory, if necessary, repair any faults and then erase fault memory => Page 9 , interrogating and erasing fault memory.
- Adapt engine control unit to throttle valve control part => Page 106 .

If display remains at 0:

- Press the ⇒key.
- Press keys 0 and 6 for the function "End output" and confirm entry with the Q key.
- Switch off ignition.
- Check voltage supply of throttle valve control part and wiring to control unit => Page 72 .

If the voltage supply and wiring is OK:

- Replace engine control unit
  => Page 104 .

Checking operating condition

- Connect fault reader V.A.G 1551 (V.A.G 1552). Start engine and select "Address word" 01 of engine control unit. When doing this the engine must be running at idling speed.
  (Connecting fault reader and selecting engine control unit => Page 2 .)

-> Indicated on display:

satelettronica

```
Rapid data transfer      HELP
Select function XX
```

- Press keys 0 and 8 for the function "Read measured value block" and confirm entry with Q key.

-> Indicated on display:

```
Read measured value block
Input display group number XXX
```

- Press keys 0, 9 and 8 for "Display Group 98" and confirm entry by pressing Q.

-> Indicated on display:
(1...4 = Display zones)

```
Read measured value block 98
     1     2     3     4
```

- Check throttle valve control part operating condition in display zone 3.
  Specification: 00000000

  Significance of figures in 8-digit number block
  => Page 28 .

If the specifications are not obtained:

- Adapt engine control unit to throttle valve control part => Page 106 .
- Repeat check.

If the specifications are again not attained:

- Check voltage supply of throttle valve control part and wiring to control unit => Page 72 .

Checking throttle valve potentiometer

Test conditions

- Coolant temperature must be at least 80 °C, =>Display group 01, display zone 2.

Test sequence

- Connect the fault reader V.A.G 1551 (V.A.G 1552). Then switch ignition on and select engine control unit with the "Address word" 01.
  (Connecting fault reader and selecting engine control unit => Page 2 .)

-> Indicated on display:

```
Rapid data transfer      HELP
Select function XX
```

- Press keys 0 and 8 for the function "Read measured value block" and confirm entry with Q key.

-> Indicated on display:

```
Read measured value block
Input display group number XXX
```

- Press keys 0, 0 and 1 for "Display group number 1" and confirm entry with Q key.

-> Indicated on display:
(1...4 = Display zones)

```
Read measured value block 1
     1     2     3     4
```

- Check whether the coolant temperature is above 80 °C in display zone 2.
- Change to display group 3 as follows:

Protected by copyright. Copying for private or commercial purposes, in part or in whole, is not permitted unless authorised by Volkswagen AG. Volkswagen AG does not guarantee or accept any liability with respect to the correctness of information in this document. Copyright by Volkswagen AG.
satelettronica

- Press C key.

-> Indicated on display:

```
Read measured value block
Input display group number XXX
```

- Press keys 0, 0 and 3 for "Display group number 3" and confirm entry with Q key.

-> Indicated on display:
(1...4 = Display zones)

```
Read measured value block 3
     1     2     3     4
```

- Read off throttle valve angle in display zone 3.
  Throttle valve in idling position: 2.0...5.0 <°
- Slowly open throttle valve and watch angle display in display zone 3.
  The figure must increase uniformly over
  the complete range.
- Press ⇒key.
- Press keys 0 and 6 for the function "End output" and confirm entry with the Q key.
- Switch off ignition.

Note:

The displayed figure is dependent on the tolerances of the throttle valve potentiometer and does not correspond to the actual opening angle.

If the figure does not increase uniformly:

- Replace throttle valve control part (J338)
  =>Page 52 , item 2 .
- Interrogate fault memory, if necessary, repair any faults and then erase fault memory => Page 9 , interrogating and erasing fault memory.
- Adapt engine control unit to throttle valve control part => Page 106 .

If the display remains constant:

- Check voltage supply of throttle valve control part and wiring to control unit => Page 72 .

Checking throttle valve positioner and throttle valve positioner potentiometer

Test conditions

- Coolant temperature must be at least 80 °C, =>Display group 01, display zone 2.

Test sequence

- Connect fault reader V.A.G 1551 (V.A.G 1552). Start engine and select "Address word" 01 of engine control unit. When doing this the engine must be running at idling speed.
  (Connecting fault reader and selecting engine control unit => Page 2.)

-> Indicated on display:

```
Rapid data transfer        HELP
Select function XX
```

- Press keys 0 and 8 for the function "Read measured value block" and confirm entry with Q key.

-> Indicated on display:

```
Read measured value block
Input display group number XXX
```

- Press keys 0, 0 and 1 for "Display group number 1" and confirm entry with Q key.

Protected by copyright. Copying for private or commercial purposes, in part or in whole, is not permitted unless authorised by Volkswagen AG. Volkswagen AG does not guarantee or accept any liability with respect to the correctness of information in this document. Copyright by Volkswagen AG.
satelettronica

-> Indicated on display:
(1...4 = Display zones)

```
Read measured value block 1
     1     2     3     4
```

- Check whether the coolant temperature is above 80 °C in display zone 2.
- Change to display group 98 as follows:
- Press C key.

-> Indicated on display:

```
Read measured value block
Input display group number XXX
```

- Press keys 0, 9 and 8 for "Display Group 98" and confirm entry by pressing Q.

-> Indicated on display:
(1...4 = Display zones)

```
Read measured value block 98
     1     2     3     4
```

- Check the throttle valve opening voltage value from throttle valve positioner potentiometer in display zone 2.
  Specification: 2.28...4.75 V
- Press the ⇒key.
- Press keys 0 and 6 for the function "End output" and confirm entry with the Q key.
- Switch off ignition.

If the specification is not obtained:

- Remove the intake hose between air mass meter and throttle valve control part.

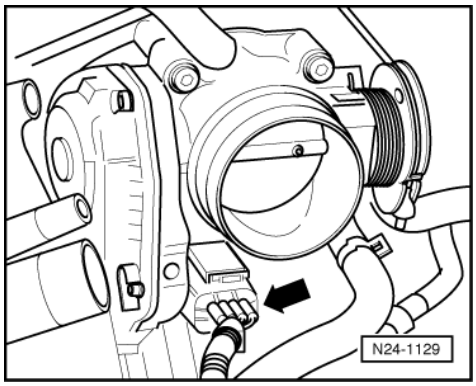

- -> Pull 8-pin connector off throttle valve control part -arrow-.

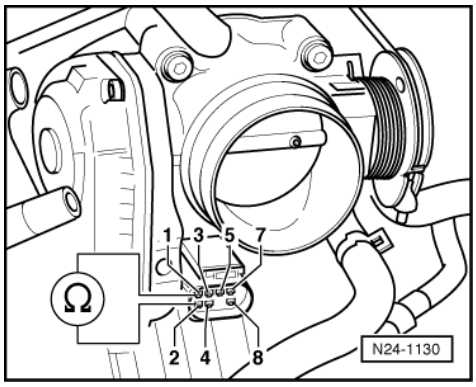

- Measure resistance of throttle valve positioner between contacts 1 + 2:
  Specification: 3...200 ω (at room temperature)

Protected by copyright. Copyright by Volkswagen AG.
This document is not guarantee or accept any liability with respect to the correctness of information
Copyright by Volkswagen AG. Volkswagen AG does not guarantee or accept any liability with respect to the correctness of information
This document is not permitted unless authorised by Volkswagen AG
Copyright. Copyright for private and commercial purposes, in part or in whole, is not permitted unless authorised by Volkswagen AG.
satelettronica

If the specification is not obtained:

- Replace throttle valve control part (J338) =>Page 52 , item 2 .
- Interrogate fault memory, if necessary, repair any faults and then erase fault memory => Page 9 , interrogating and erasing fault memory.
- Adapt engine control unit to throttle valve control part => Page 106 .

If the specification is obtained:

- Check voltage supply of throttle valve control part and wiring to control unit => Page 72 .

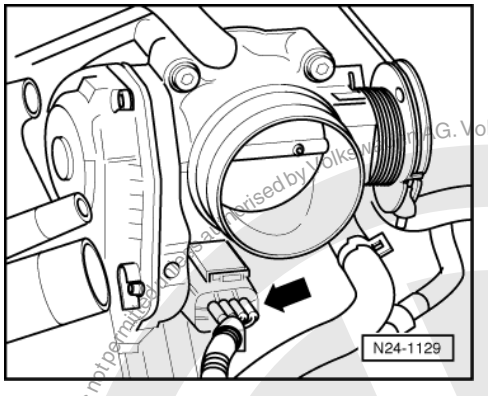

Protected by copyright. Copying for private or commercial purposes, in part or in whole, is not permitted unless authorised by Volkswagen AG. Volkswagen AG does not guarantee or accept any liability with respect to the correctness of information in this document. Copyright by Volkswagen AG.

Checking voltage supply and wiring to control unit

- Remove the intake hose between air mass meter and throttle valve control part.
- -> Pull 8-pin connector off throttle valve control part -arrow-.

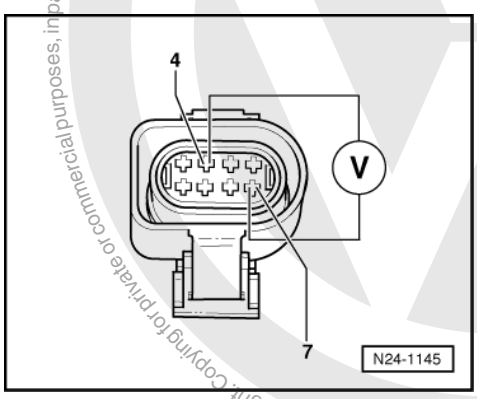

- -> Connect multimeter to measure voltage at contacts 4 + 7 (engine control unit connector).
- Switch on ignition.
  Specification: min. 4.5 V
- Switch off ignition.

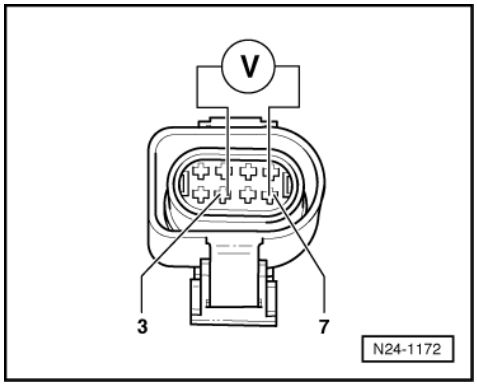

satelettronica

- -> Connect multimeter to measure voltage at contacts 3 + 7 (engine control unit connector).
- Switch on ignition.
  Specification: min. 9.0 V
- Switch off ignition.

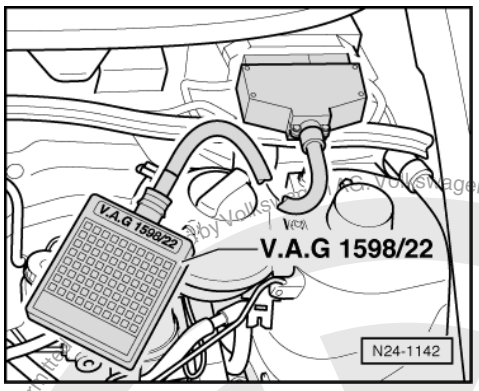

- -> Connect test box V.A.G 1598/22 to control unit wiring harness.

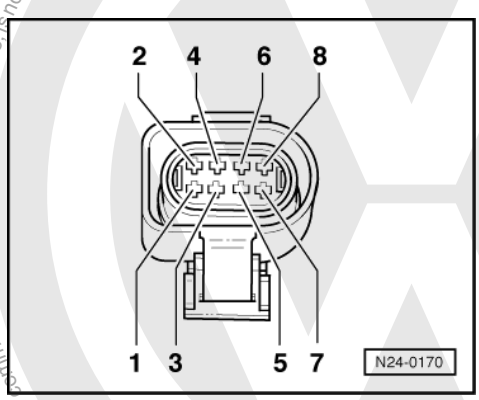

- -> Check wiring for open circuit between test box and 8-pin connector using current flow diagram:
  Contact 1 and test box socket 66
  Contact 2 and test box socket 59
  Contact 3 and test box socket 69
  Contact 4 and test box socket 62
  Contact 5 and test box socket 75
  Contact 7 and test box socket 70
  Contact 8 and test box socket 74
  Wire resistance: max. 1.5 ω
- Additionally check wires for short to one another, to vehicle earth and to battery positive.
  Specification: ∞ω

If no wiring fault is detected:

- Check engine control unit voltage supply => Page 102 .

2.5 - Checking coolant temperature sender

Special tools, workshop equipment, testers, measuring instruments and auxiliary items required

- Hand multimeter V.A.G 1526 or multimeter V.A.G 1715
- Fault reader V.A.G 1551 (or vehicle system tester V.A.G 1552) with cable V.A.G 1551/3
- Adapter set V.A.G 1594
- Test box V.A.G 1598/22
- Current flow diagram

Copyright by Volkswagen AG. Volkswagen AG does not guarantee or accept any liability with respect to the correctness of information in this document. Copyright by Volkswagen AG. Reproduction, in whole or in part, for commercial purposes, in part or in whole, is not permitted. Reproduction for private or commercial purposes, in part or in whole, is not permitted.
satelettronica

Check conditions

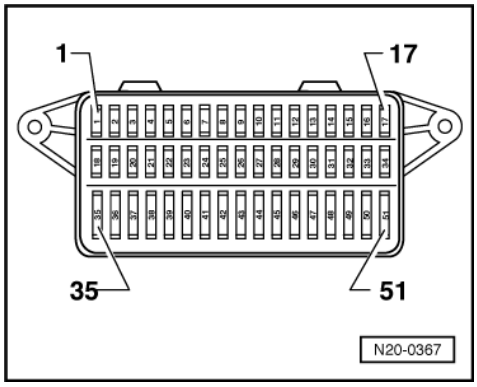

- -> Fuses 13 and 36 must be OK.
- Earth connection in plenum chamber OK.
- Engine must be cold.

Test sequence

- Connect the fault reader V.A.G 1551 (V.A.G 1552). Then switch ignition on and select engine control unit with the "Address word" 01.
  (Connecting fault reader and selecting engine control unit => Page 2 .)

-> Indicated on display:

```
Rapid data transfer      HELP
Select function XX
```

- Press keys 0 and 8 for the function "Read measured value block" and confirm entry with Q key.

-> Indicated on display:

```
Read measured value block
Input display group number XXX
```

- Press keys 0, 0 and 1 for "Display group number 1" and confirm entry with Q key.

-> Indicated on display:
(1...4 = Display zones)

```
Read measured value block 1
     1      2     3     4
```

- Read off coolant temperature value in display zone 2.
  Specification: approx. coolant temperature

If the specification is not obtained:

- Perform check according to following table:

Appears on display	Possible fault cause	Fault elimination
Approx. coolant temperature1)	---	Only when a sporadic fault is detected: When display is coolant temperature, continue with checks => Page 75 2)

Copyright by Volkswagen AG. Volkswagen AG does not guarantee or accept any liability with respect to the correctness of information in this document. Copyright by Volkswagen AG. Copyright. Copy and distribution of this document, in whole or in part, is not permitted unless authorised by Volkswagen AG. For private or commercial purposes, in part or in whole, is not permitted unless authorised by Volkswagen AG.
satelettronica

Constant 120.0 °C	- Wiring open circuit or short to positive or earth - Coolant temperature sender (G62) defective	- Continuation of check when a constant 120 °C is displayed => Page 75

1) When a temperature is displayed which deviates greatly from coolant temperature, first check sender wiring for transfer resistance.

2) Check only possible when engine is cold.

Continuation of check when display = coolant temperature:

Test conditions

- Engine must be cold.

Functional check of sender

- Start engine and run at idling speed.
- Observe coolant temperature value in display zone 2 whilst engine is running. The temperature figure must increase uniformly.

Notes:

- The fault reader display can increase in 1 °C steps.
- If a coolant temperature sender fault is indicated in fault memory even though the temperature increases uniformly, the engine control unit is in the emergency running mode and calculates the coolant temperature.

- Press ⇒key.
- Press keys 0 and 6 for the function "End output" and confirm entry with the Q key.
- Switch off ignition.

If the figure does not increase uniformly:

- Replace coolant temperature sender (G62) with coolant temperature gauge sender (G2) =>Page 48 , item 19 .
- Interrogate fault memory, if necessary, repair any faults and then erase fault memory => Page 9 , interrogating and erasing fault memory.

Continuation of test when constant 120 °C is displayed:

- Press ⇒key.

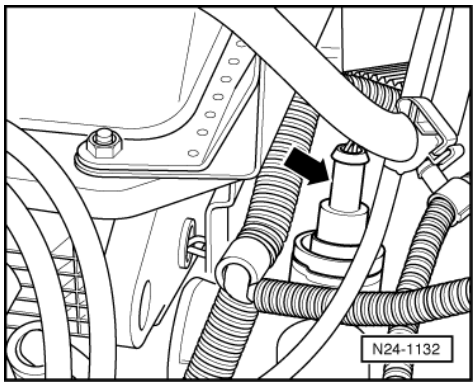

- Press keys 0 and 6 for the function "End output" and confirm entry with the Q key.
- Switch off ignition.

Volkswagen AG. Volkswagen AG does not guarantee or accept any liability with respect to the correctness of information in this document. Copyright by Volkswagen AG. Protected by copyright. Copying for private or commercial purposes, in part or in whole, is not permitted unless authorised by Volkswagen AG.
satelettronica

- -> Pull the 4 pin connector off coolant temperature sender (G62) with coolant temperature gauge sender (G2) -arrow-.

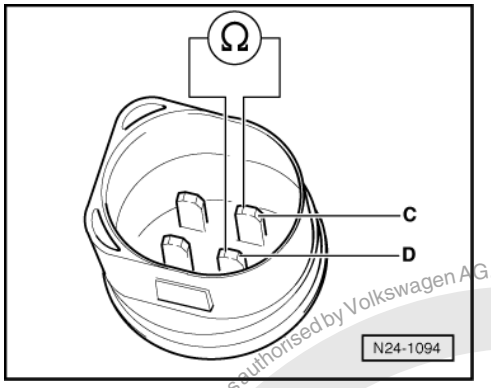

- -> Measure resistance from coolant temperature sender between contact C (signal) + contact D (earth).

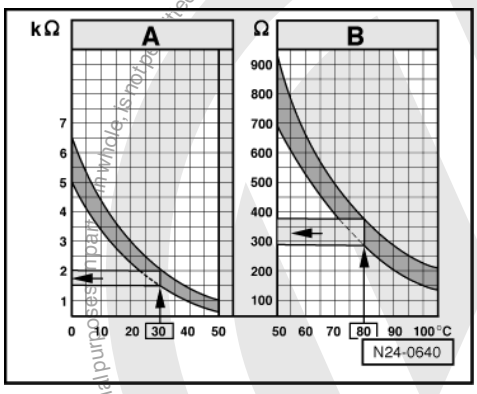

-> Specification see diagram

The diagram is divided into two temperature ranges:

A - From 0...50 °C
B - From 50...105 °C

Examples:

- 30 °C is in range A and corresponds to a resistance of 1.5...2.0 kω
- 80 °C is in range B and corresponds to a resistance of 275...375 ω

If the specification is not obtained:

- Replace coolant temperature sender (G62) with coolant temperature gauge sender (G2) =>Page 48 , item 19 .
- Interrogate fault memory, if necessary, repair any faults and then erase fault memory => Page 9 , interrogating and erasing fault memory.

If the specification is attained:

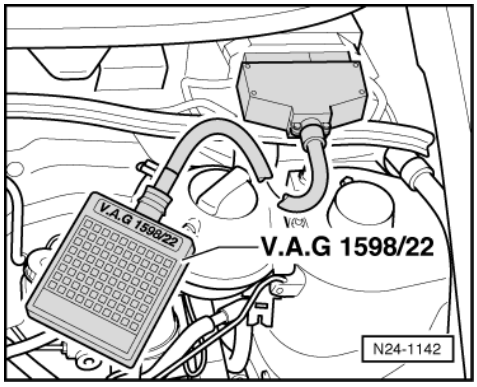

Protected by copyright. Copying for private or commercial purposes, in whole or in part, is not permitted unless authorised by Volkswagen AG. Volkswagen AG does not guarantee or accept any liability with respect to the correctness of information in this document. Copyright by Volkswagen AG.
satelettronica

- -> Connect test box V.A.G 1598/22 to control unit wiring harness.

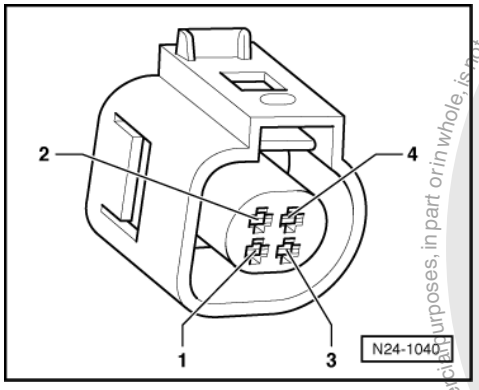

- Check wiring for open circuit between test box and 4-pin connector using current flow diagram.
  Contact 3 and test box socket 53
  Contact 4 and test box socket 70
  Wire resistance: max. 1.5 ω
- Additionally check wires for short to one another, to vehicle earth and to battery positive.
  Specification: ∞ω

If there is no fault in the wiring and the resistance measurement values are OK.:

- Replace engine control unit
  => Page 104 .

2.6 - Checking intake air temperature sender

Special tools, workshop equipment, testers, measuring instruments and auxiliary items required

- Hand multimeter V.A.G 1526 or multimeter V.A.G 1715
- Fault reader V.A.G 1551 (or vehicle system tester V.A.G 1552) with cable V.A.G 1551/3
- Adapter set V.A.G 1594
- Test box V.A.G 1598/22
- Chilling spray (commercially available)
- Current flow diagram

Test conditions

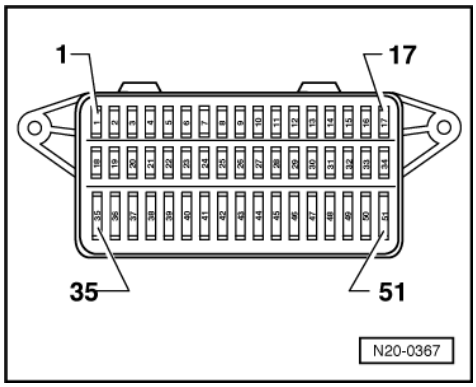

- -> Fuses 13 and 36 must be OK.
- Earth connection in plenum chamber OK.

Test sequence

- Connect the fault reader V.A.G 1551 (V.A.G 1552). Then switch ignition on and select engine control unit with the "Address word" 01.

Protected by copyright. Copyright by Volkswagen AG.
Volkswagen AG does not guarantee or accept any liability with respect to the correctness of information in this document. Copyright by Volkswagen AG.
Copying for private or commercial purposes, in part or in whole, is not permitted unless authorised by Volkswagen AG.
satelettronica

(Connecting fault reader and selecting engine control unit => Page 2 .)

-> Indicated on display:

```
Rapid data transfer      HELP
Select function XX
```

- Press keys 0 and 8 for the function "Read measured value block" and confirm entry with Q key.

-> Indicated on display:

```
Read measured value block
Input display group number XXX
```

- Press keys 0, 0 and 5 for "Display group number 5" and confirm entry with Q key.

-> Indicated on display:
(1...4 = Display zones)

```
Read measured value block 5
     1      2      3      4
```

- Read off intake air temperature in display zone 4.
  Specification: about ambient temperature

If the specification is not obtained:

- Perform check according to following table:

Appears on display	Possible fault cause	Fault elimination
Above ambient temperature1)	---	Only if a sporadic fault was recognised: Continuation if display is about ambient temperature => Page 78
Constant 40 °C	- Wiring open circuit or short to positive or earth - Intake air temperature sender (G42) defective	- Continuation if display is constant 40 °C => page 79

1) If a temperature is displayed which deviates substantially from the ambient temperature, first check sender wiring for transfer resistance, keeping in mind that the sender may be warmed by heat radiated while vehicle is stationary.

Continuation of check when display = ambient temperature:

Functional check of sender

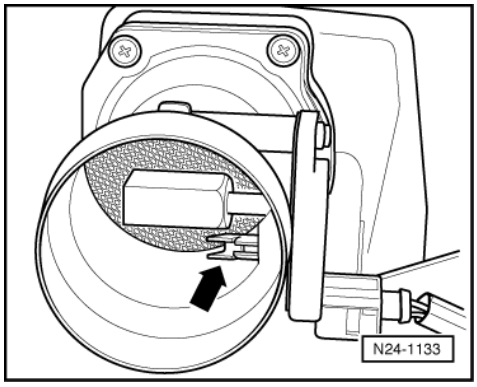

Copyright by Volkswagen AG. Volkswagen AG does not guarantee or accept any liability with respect to the correctness of information in this document. Copyright by Volkswagen AG. Copying for private or commercial purposes, in whole or in part, is not permitted unless authorised by Volkswagen AG.
satelettronica

- Remove the intake hose between air mass meter and throttle valve control part.
- Note intake air temperature value in display zone 4.
- -> Spray sender -arrow- with commercial chilling agent whilst observing the temperature value. The temperature value must
  decrease.
- Press ⇒key.
- Press keys 0 and 6 for the function "End output" and confirm entry with the Q key.
- Switch off ignition.

If the specification is not obtained:

- Renew air mass meter (G70) with intake air temperature sender (G42) =>Page 57 , item 5 .
- Interrogate fault memory, if necessary, repair any faults and then erase fault memory => Page 9 , interrogating and erasing fault memory.

Continuation of check when a constant 40 °C is displayed:

- Press ⇒key.

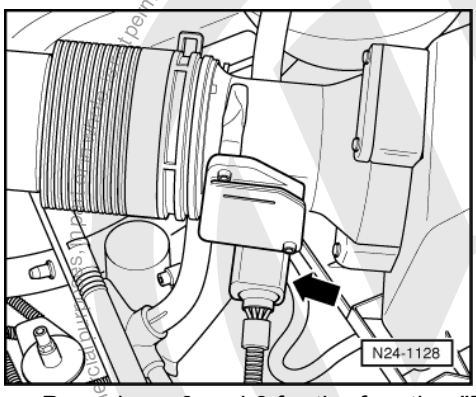

- Press keys 0 and 6 for the function "End output" and confirm entry with the Q key.
- Switch off ignition.
- -> Pull 4-pin connector off air mass meter (G70) -arrow-.

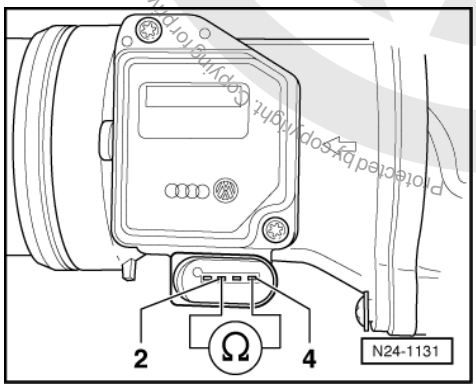

- -> Check resistance from intake air temperature sender between contacts 2 + 4.

satelettronica

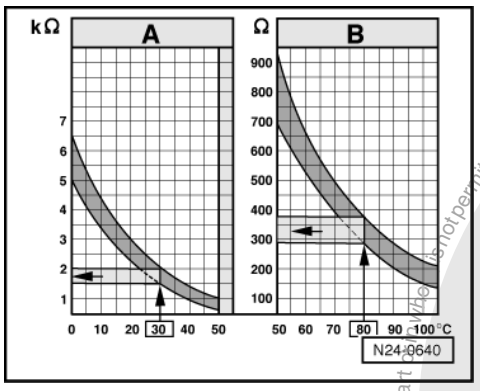

-> Specification see diagram

The diagram is divided into two temperature ranges:

A - From 0...50 °C
B - From 50...105 °C

Examples:

- 30 °C is in range A and corresponds to a resistance of 1.5...2.0 kω
- 80 °C is in range B and corresponds to a resistance of 275...375 ω

If the specification is not obtained:

- Renew air mass meter (G70) with intake air temperature sender (G42) =>Page 57 , item 5 .

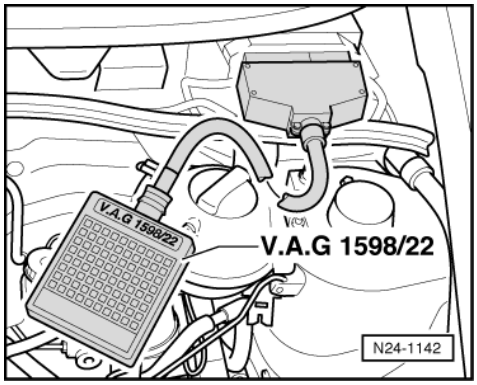

- Interrogate fault memory, if necessary, repair any faults and then erase fault memory => Page 9 , interrogating and erasing fault memory.

If the specification is attained:

- -> Connect test box V.A.G 1598/22 to control unit wiring harness.

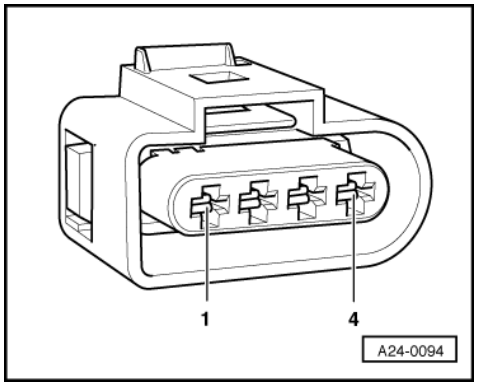

Protected by copyright. Copying for private or commercial purposes, in part or whole is not permitted unless authorised by Volkswagen AG. Volkswagen AG does not guarantee or accept any liability with respect to the correctness of information in this document. Copyright by Volkswagen AG.
satelettronica

- Check wiring for open circuit between test box and 4-pin connector using current flow diagram:
  Contact 2 and test box socket 12
  Contact 4 and test box socket 9
  Wire resistance: max. 1.5 ω
- Additionally check wires for short to one another, to vehicle earth and to battery positive.
  Specification: ∞ω

If there is no fault in the wiring and the resistance measurement values are OK.:

- Replace engine control unit
  => Page 104 .

2.7 - Checking engine speed sender

Notes:

- The engine speed sender (G28) is a combined speed sender and reference mark sender.
- The engine can run without a signal from the G28. It is also possible (with considerable difficulty) to start the engine without a signal from the G28 (emergency running function).

Special tools, workshop equipment, testers, measuring instruments and auxiliary items required

- Hand multimeter V.A.G 1526 or multimeter V.A.G 1715
- Adapter set V.A.G 1594

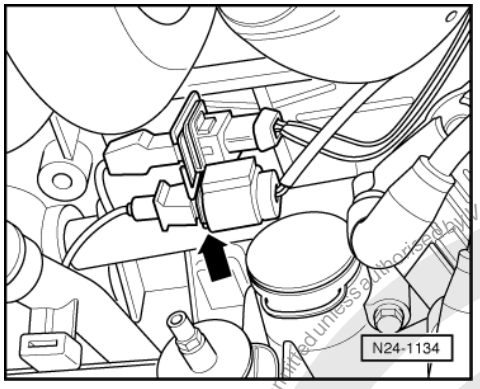

- Test box V.A.G 1598/22
- Current flow diagram

Test sequence

- -> Disconnect grey/black 3-pin connector for engine speed sender -arrow-.

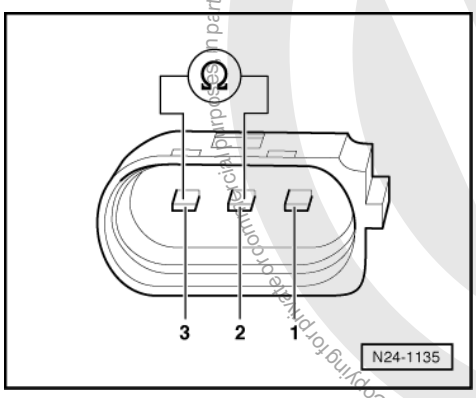

- -> Measure resistance between connector contacts 2 + 3 of engine speed sender.
  Specification: about 730...1000 ω(at room temperature)
- Check the sender for short between contacts 1+3 and 2+3.

satelettronica
Protected by copyright. Copying for private or commercial purposes, in part or in whole, is not permitted unless authorised by Volkswagen AG. Volkswagen AG does not guarantee or accept any liability with respect to the correctness of information in this document. Copyright by Volkswagen AG.

Specification: ∞ω

If the specifications are not obtained:

- Replace engine speed sender (G28)
  =>Page 49 , item 23 .
- Interrogate fault memory, if necessary, repair any faults and then erase fault memory => Page 9 , interrogating and erasing fault memory.

If no sender fault is detected:

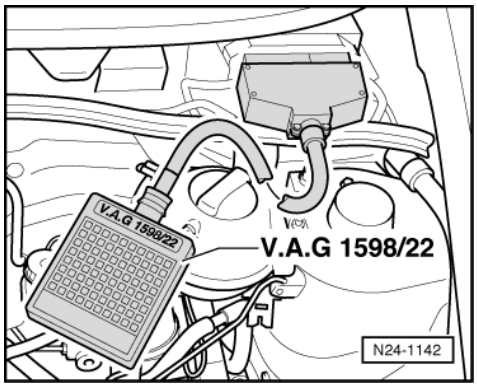

- -> Connect test box V.A.G 1598/22 to control unit wiring harness.

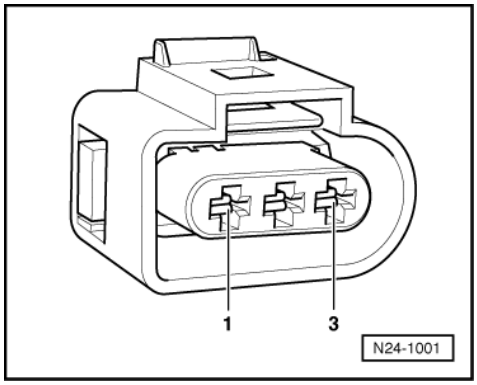

- -> Check wiring for open circuit between test box and 3-pin connector using current flow diagram.
  Contact 1 and test box socket 70 (shielding)
  Contact 2 and test box socket 63
  Contact 3 and test box socket 56
  Wire resistance: max. 1.5 ω
- Additionally check wires for short to one another, to vehicle earth and to battery positive.
  Specification: ∞ω

If no wiring fault is detected:

- Remove sender and check sender wheel for secure fit, damage and run-out.

Note:

There is a larger gap on the sender wheel. This gap is the reference mark and does not mean that the sender wheel is damaged.

If no fault is detected on sender wheel:

- Replace engine control unit
  => Page 104 .

Protected by copyright. Copying for private or commercial purposes, in part or in whole, is not permitted unless authorised by Volkswagen AG. Volkswagen AG does not guarantee or accept any liability with respect to the correctness of information in this document. Copyright by Volkswagen AG.
satelettronica

2.8 - Checking injectors

Special tools, workshop equipment, testers, measuring instruments and auxiliary items required

- Hand multimeter V.A.G 1526 or multimeter V.A.G 1715
- Diode test lamp V.A.G 1527
- Adapter set V.A.G 1594
- Test box V.A.G 1598/22
- Current flow diagram

Check conditions

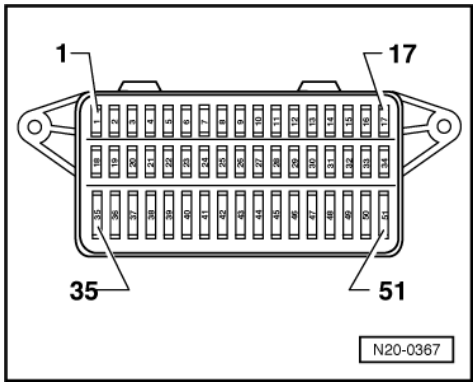

- -> Fuses 1 and 3 must be OK.
- The battery voltage must be at least 11.5 V.
- Earth connection in plenum chamber OK.
- All electrical consumers, e.g. lights and rear window heating must be switched off.
- If the vehicle is equipped with an air conditioner, this must be switched off.
- Fuel pump relay must be OK =>Page 16 , final control diagnosis.
- Engine speed sender must be OK, checking =>Page 81 .
- Hall sender must be OK, checking =>Page 128 .

Checking activation and voltage supply

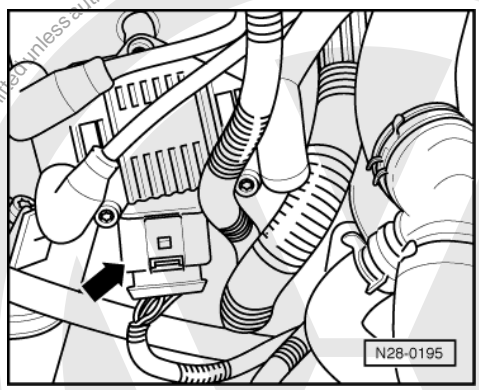

- -> Pull 4 pin connector off ignition transformer (N152) -arrow-.
- Remove intake manifold upper part => Page 45 , Removing and installing parts of injection system.
- Pull plug off all injectors.

Protected by copyright. Copying for private or commercial purposes, in part or in whole, is not permitted unless authorised by Volkswagen AG. Volkswagen AG does not guarantee or accept any liability with respect to the correctness of information in this document. Copyright by Volkswagen AG.
satelettronica

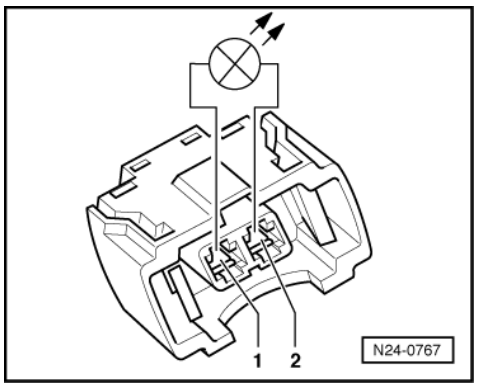

- -> Connect diode test lamp V.A.G 1527 using aux. cables from V.A.G 1594 to connector contacts of Cyl. 1.
- Operate the starter and check the voltage supply for No. 1 cylinder injector.
  The LED must flash.
- Repeat check at the injector connectors for Cyls. 2...4.
- Switch off ignition.

If the LED does not flash on one or more cylinders:

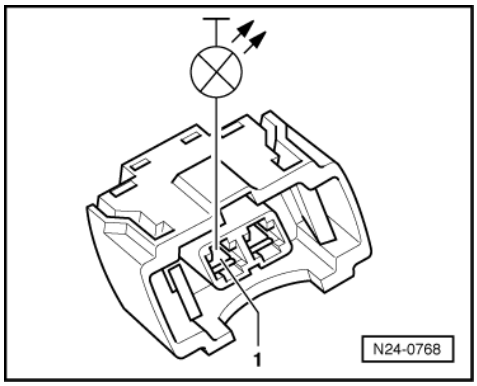

- -> Connect diode test lamp to contact 1 and earth of relevant injector connector.
- Operate the starter and check the voltage supply for No. 1 cylinder injector.
  The LED must light up
- Repeat check at the injector connectors for Cyls. 2...4.
- Switch off ignition

If the LED does not light up:

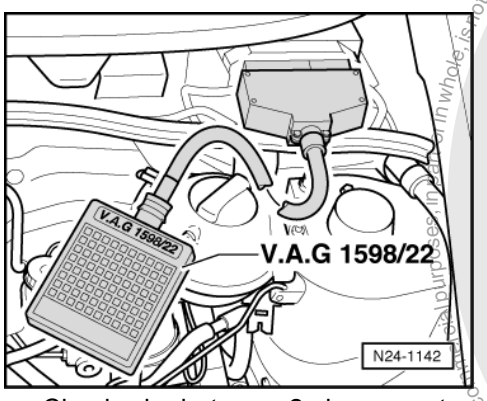

- Check wire between 2 pin connector contact 1 and fuel pump relay (J17) for open circuit using current flow diagram.
  Wire resistance: max. 1.5 ω

If the LED lights up on one or several cylinders:

- -> Connect test box V.A.G 1598/22 to control unit wiring harness.

satelettronica
Protected by copyright. Copying for private or commercial purposes, in part or in whole, is not permitted unless authorised by Volkswagen AG. Volkswagen AG does not guarantee or accept any liability with respect to the correctness of information in this document. Copyright by Volkswagen AG.

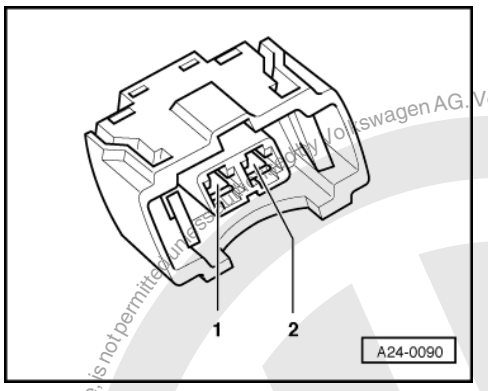

- -> Check wiring for open circuit between test box and 2-pin connector using current flow diagram.
  Injector 1: Contact 2 and socket 73
  Injector 2: Contact 2 and socket 80
  Injector 3: Contact 2 and socket 58
  Injector 4: Contact 2 and socket 65
  Wire resistance: max. 1.5 ω
- Additionally check wires for short to one another between contacts 2 to vehicle earth and to battery positive.
  Specification: ∞ω
- Check wiring between connector contacts 1 of injectors for open circuit to one another.
  Wire resistance: Max. 1.5 ω

If no wiring fault is detected:

- Check resistance of injectors
  => Page 85 .

Checking resistance of injectors

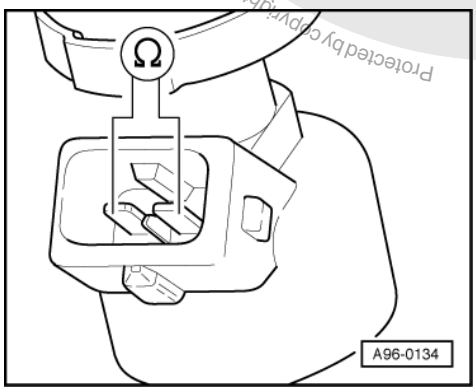

- -> Check resistance of injectors between contacts.
  Specification: 14.0...17.0 ω

Note:

The resistance figures are valid for approx. 20 °C. At higher temperatures the resistance figures will increase.

If the specification is not attained:

- Renew defective injector
  =>Page 55 , item 6 .

Perform installation of injectors in reverse order. When doing this note the following:

- Renew O-rings on all injectors and lightly moisten with clean engine oil.
- Insert injectors vertically and in the correct position into the fuel rail and secure with retaining clips.

Protected by copyright. Copying for private or commercial purposes, in part or in whole, is not permitted unless authorised by Volkswagen AG. Volkswagen AG does not guarantee or accept any liability with respect to the correctness of information in this document. Copyright by Volkswagen AG.
satelettronica

- With injectors secured to fuel rail, fit fuel rail on intake manifold lower part and press in evenly.

- Interrogate fault memory, if necessary, repair any faults and then erase fault memory => Page 9 , interrogating and erasing fault memory.

If the resistances are OK and no faults can be detected in the wiring:

- Replace engine control unit
  => Page 104 .

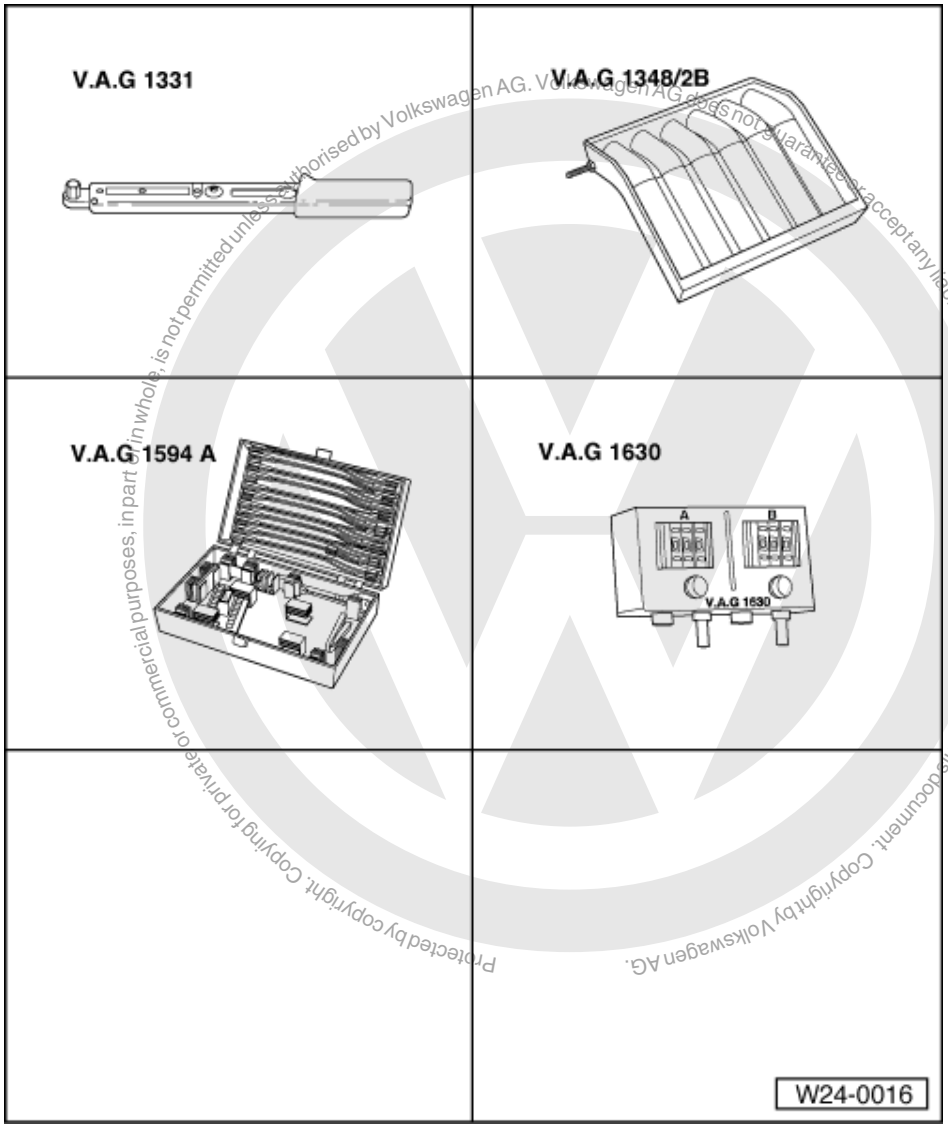

Protected by copyright. Copying for private or commercial purposes, in part or in whole, is not permitted unless authorised by Volkswagen AG. Volkswagen AG does not guarantee or accept any liability with respect to the correctness of information in this document. Copyright by Volkswagen AG.

satelettronica

Checking spray pattern and for leaks

Special tools, workshop equipment, test and measuring appliances and aux. items required

- V.A.G 1331 Torque wrench (5...50 Nm)
- V.A.G 1348/2 B Meter (for injection quantity)
- V.A.G 1594 A Adapter set
- V.A.G 1630 Digital potentiometer

Test conditions

- The fuel pressure must be in order, checking

=> Page 89 , checking fuel pressure regulator and holding pressure.

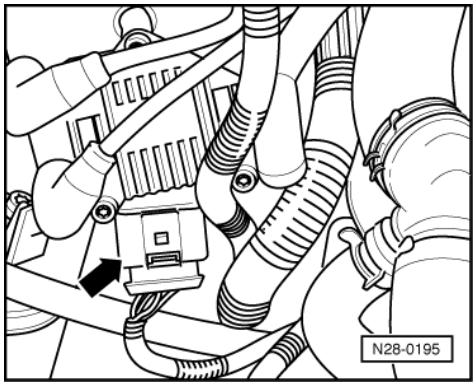

Test sequence

- Remove intake manifold upper part => Page 45 , Removing and installing parts of injection system.
- -> Pull 4 pin connector off ignition transformer (N152) -arrow-.

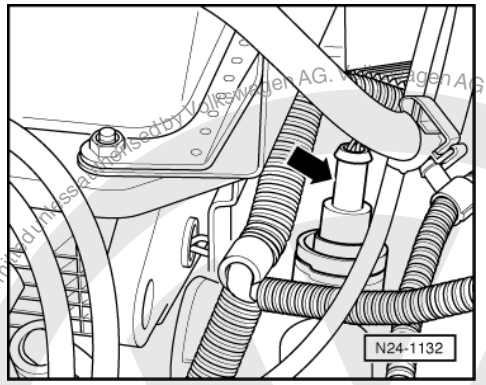

- -> Pull the 4 pin connector off coolant temperature sender (G62) with coolant temperature gauge sender (G2) -arrow-.

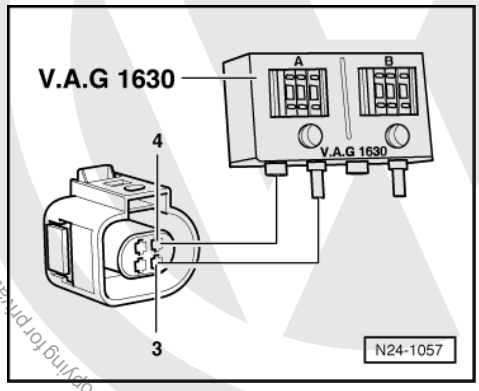

- -> Connect digital potentiometer V.A.G 1630 using aux. cables from V.A.G 1594 to connector contacts 3+4 and set connected side to 15 kω.
- Remove fuel rail complete with injectors from intake manifold lower part (reattach fuel hoses and injector connectors)=> Page 46 , item 11 .

Warning!
Fuel supply pipes are under pressure! Before removing from hose connection wrap a cloth around the connection. Then release pressure by carefully pulling hose off connection.

satelettronica

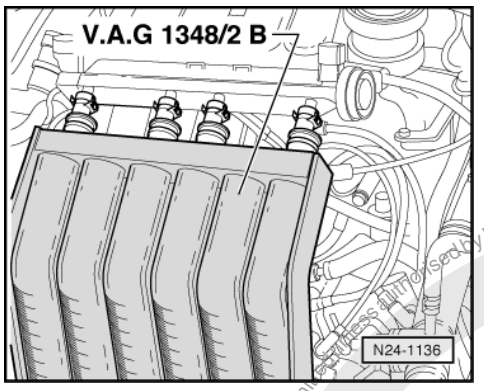

- -> Hold injectors in meter V.A.G 1348/2 B.
- Have 2nd person operate starter. Injector must spray in pulses according to firing order.
- Switch off ignition.

- Switch off ignition and afterwards check injectors for leaks. No more than
  2 drops/min
  may leak from each injector.

If the fuel loss is greater:

- Renew defective injector
  =>Page 55 , item 6 .

Perform installation of injectors in reverse order. When doing this note the following:

- Renew O-rings on all injectors and lightly moisten with clean engine oil.
- Insert injectors vertically and in the correct position into the fuel rail and secure with retaining clips.
- With injectors secured to fuel rail, fit fuel rail on intake manifold lower part and press in evenly.

- Interrogate fault memory, if necessary, repair any faults and then erase fault memory => Page 9 , interrogating and erasing fault memory.

Protected by copyright. Copyright by Volkswagen AG. Volkswagen AG does not guarantee or accept any liability with respect to the correctness of information in this document. Copyright by Volkswagen AG.
satelettronica

2.9 - Checking fuel pressure regulator and holding pressure

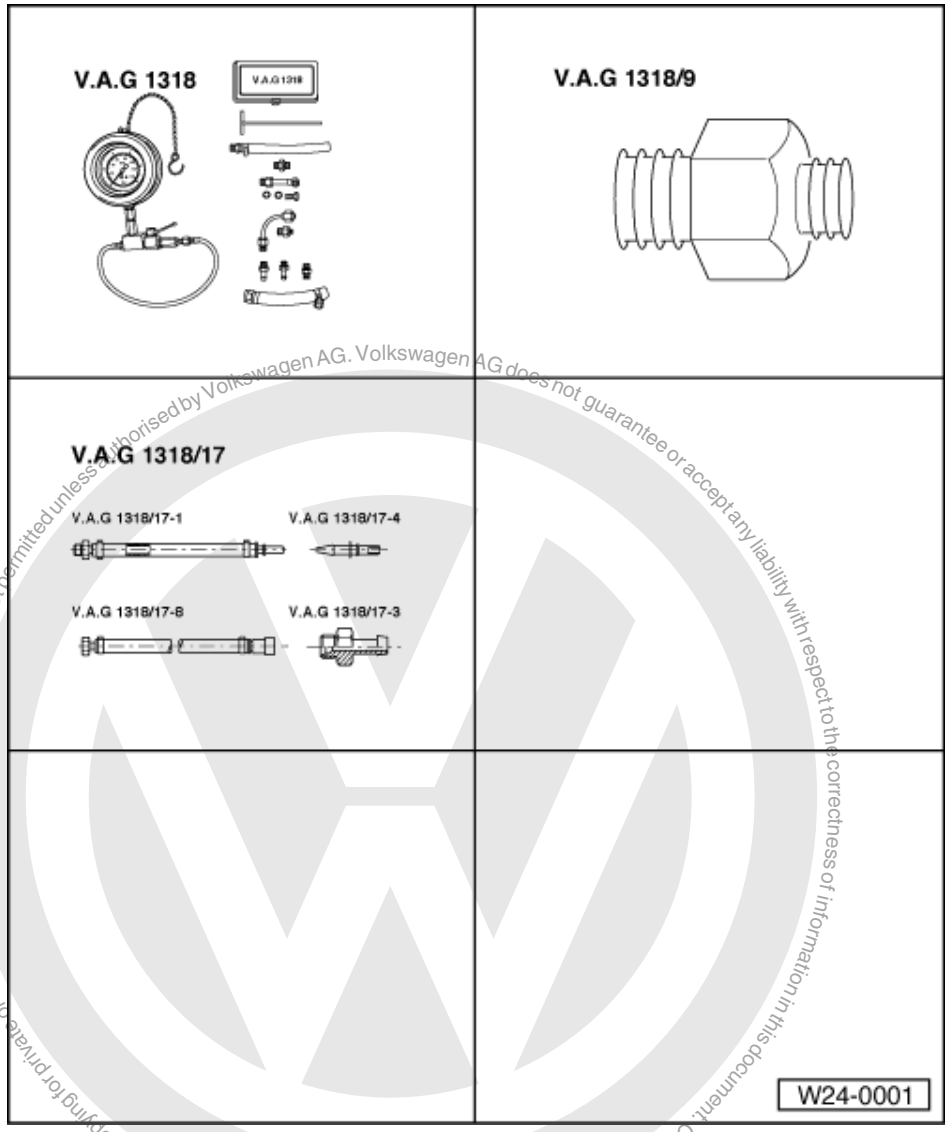

Function

The fuel pressure regulator regulates the fuel pressure depending on intake manifold pressure.

Special tools, workshop equipment, test and measuring appliances and aux. items required

- V.A.G 1318 Pressure gauge
- V.A.G 1318/9 Adapter
- V.A.G 1318/17 Adapter set

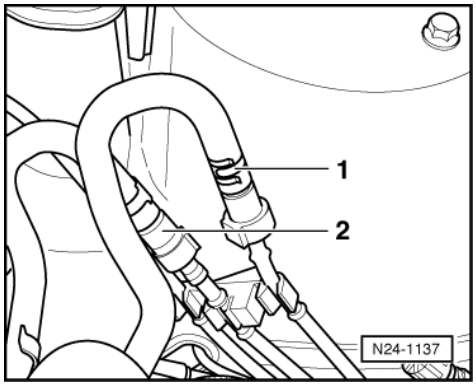

satelettronica

Test sequence

- -> Pull off supply pipe/hose -1- (with white marking) and collect fuel that leaks out with a cloth.

Note:

Press buttons on hose couplings to do this.

Warning!
Fuel supply pipes are under pressure! Before removing from hose connection wrap a cloth around the connection. Then release pressure by carefully pulling hose off connection.

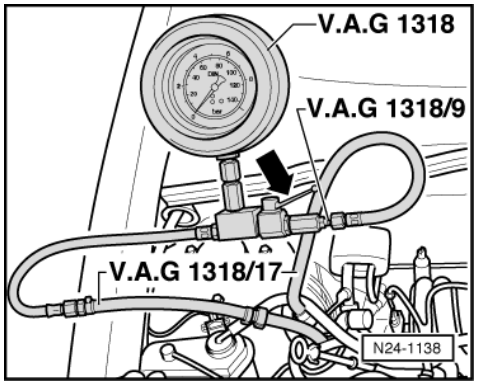

- -> Connect pressure tester V.A.G 1318 to fuel supply pipe and to fuel supply hose to fuel rail using adapters 1318/9 and 1318/17.
- Open shut-off tap on pressure gauge. The handle points in direction of flow.
- Start the engine and run at idling speed.
- Measure fuel pressure.
  Specification: Approx. 2.5 bar

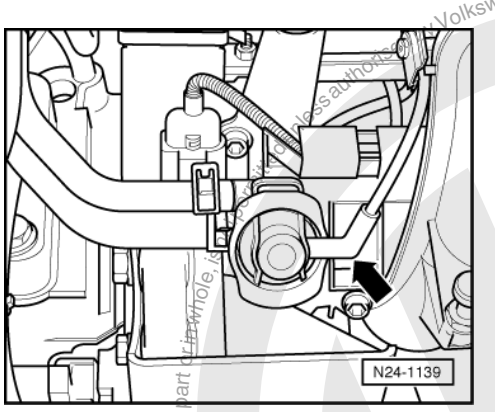

- -> Pull the vacuum hose off fuel pressure regulator -arrow- . The fuel pressure must increase to approx. 3.0 bar.
- Switch off ignition.

If the specification is not obtained:

- Check quantity supplied by fuel pump.

=> Rep. Gr. 20; Removing and installing parts of fuel system; checking fuel pump

If the specification is obtained:

- Check for leaks and holding pressure by observing pressure drop on gauge. After 10 minutes there must be
  a residual pressure of

Protected by copyright. Copying for private or commercial purposes, in part or in whole, is not permitted unless authorised by Volkswagen AG. Volkswagen AG does not guarantee or accept any liability with respect to the correctness of information in this document. Copyright by Volkswagen AG.
satelettronica

at least 2.0 bar.

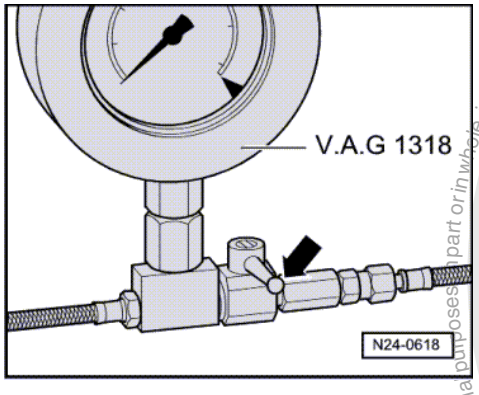

If the holding pressure drops below 2 bar:

- Start the engine and run at idling speed.
- -> Switch ignition off after the pressure has built-up. At the same time close pressure measured device cut-off tap (handle cross through-flow direction -arrow-).
- Observe pressure drop on gauge.

If the pressure does not drop:

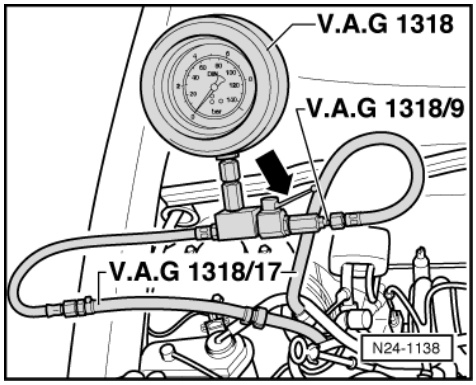

- Check fuel pump non-return valve.

=> Rep. Gr. 20; Removing and installing parts of fuel system; checking fuel pump

If the pressure drops again:

- -> Open pressure tester V.A.G 1318 shut-off tap (handle in through-flow direction).
- Start the engine and run at idling speed.

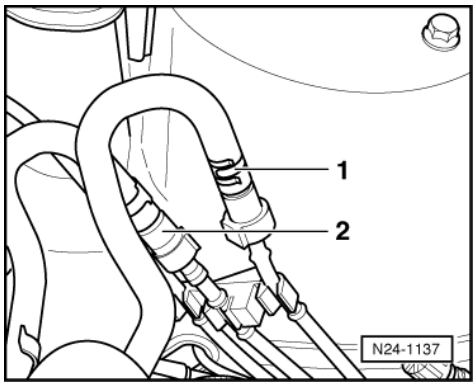

- -> Switch ignition off after the pressure has build-up. At the same time clamp-off the return hose (with blue marking) -2-.

Protected by copyright. Copyright by Volkswagen AG.
Copyright by Volkswagen AG. Volkswagen AG does not guarantee or accept any liability with respect to the correctness of information in this document. Copying for private or commercial purposes, in part or in whole, is not permitted unless authorised by Volkswagen AG.
satelettronica

If the pressure does not drop:

- Renew fuel pressure regulator
  =>Page 56 , item 10 .

If the pressure drops again:

- Check pipe connections, O rings on fuel manifold and injectors for leaks.
- Check pressure gauge for leaks.

Note:

Before removing pressure gauge place a cloth around the connections to be loosened.

2.10 - Checking intake air system for leaks (unmetered air)

Checking with engine leak detector spray G 001 800 A1

Notes:

- The vacuum in the intake system will draw in the leak detector spray together with the unmetered air. The leak detector spray reduces the ignitability of the mixture. This leads to a drop in engine speed and to a change of Lambda probe reading.
- The safety precautions listed on the container must be adhered to.

Special tools, workshop equipment, testers, measuring instruments and auxiliary items required

- Fault reader V.A.G 1551 (or vehicle system tester V.A.G 1552) with cable V.A.G 1551/3
- Engine leak detector spray G 001 800 A1

Test conditions

- Coolant temperature must be at least 80 °C, =>Display group 01, display zone 2.

Test sequence

- Connect fault reader V.A.G 1551 (V.A.G 1552). Start engine and select "Address word" 01 of engine control unit. When doing this the engine must be running at idling speed.
  (Connecting fault reader and selecting engine control unit => Page 2 .)

-> Indicated on display:

```
Rapid data transfer     HELP
Select function XX
```

- Press keys 0 and 8 for the function "Read measured value block" and confirm entry with Q key.

-> Indicated on display:

```
Read measured value block
Input display group number XXX
```

- Press keys 0, 0 and 1 for "Display group number 1" and confirm entry with Q key.

-> Indicated on display:
(1...4 = Display zones)

```
Read measured value block 1
     1     2     3     4
```

- Check whether the coolant temperature is above 80 °C in display zone 2.
- Observe the engine speed in display zone 1 and the Lambda probe voltage in display zone 3.

Protected by copyright. Copying for private or commercial purposes, part or in whole, is not permitted unless authorised by Volkswagen AG. Volkswagen AG does not guarantee or accept any liability with respect to the correctness of information in this document. Copyright by Volkswagen AG.
satelettronica

- Systematically spray parts of the intake system with engine leak detector spray.

If the engine speed drops or the Lambda probe voltage briefly remains constant:

- Press the ⇒key.
- Press keys 0 and 6 for the function "End output" and confirm entry with the Q key.
- Switch off ignition.
- Check sprayed areas of intake system for leaks and rectify if necessary.

3 - Checking functions

3.1 - Checking functions

3.2 - Idling check

Notes:

- Idling speed, ignition timing and CO content are not adjustable.
- The idling speed is regulated to specification by the throttle valve positioner in conjunction with the DIS function.
- Lambda regulation keeps the CO content at specification. Faults in Lambda regulation are detected by self-diagnosis and stored in fault memory.

Special tools, workshop equipment, testers, measuring instruments and auxiliary items required

- Fault reader V.A.G 1551 (or vehicle system tester V.A.G 1552) with cable V.A.G 1551/3

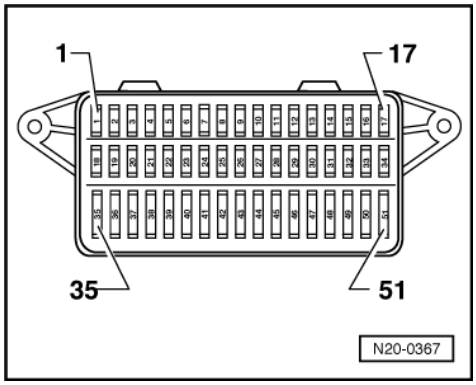

Check conditions

- -> The fuses 1, 3, 31, 34, 36 and 40 must be OK.
- Earth connection in plenum chamber OK.
- Exhaust system between cylinder head and catalyst free of leaks
- All electrical consumers, e.g. lights and rear window heating must be switched off
- If the vehicle is equipped with an air conditioner, this must be switched off.
- On vehicles with an automatic gearbox the selector lever must be in P or N.
- Throttle cable adjustment must be OK, checking:

=> Repair group 20; Accelerator mechanism; Adjusting accelerator cable Accelerator mechanism Adjusting accelerator cable

- Coolant temperature must be at least 80 °C, =>Display group 01, display zone 2.

satelettronica
Copyright by Volkswagen AG. Volkswagen AG does not guarantee or accept any liability with respect to the correctness of information in this document. Copying for private or commercial purposes, in part or in whole, is not permitted unless authorised by Volkswagen AG.

Test sequence

- Connect fault reader V.A.G 1551 (V.A.G 1552). Start engine and select "Address word" 01 of engine control unit. When doing this the engine must be running at idling speed.
  (Connecting fault reader and selecting engine control unit => Page 2 .)
- Interrogate fault memory, if necessary, repair any faults and then erase fault memory => Page 9 , interrogating and erasing fault memory.
- Then:
  - Leave fault reader or vehicle system tester connected.
  - Continue running engine at idling speed.

-> Indicated on display:

```
Rapid data transfer     HELP
Select function XX
```

- Press keys 0 and 8 for the function "Read measured value block" and confirm entry with Q key.

-> Indicated on display:

```
Read measured value block
Input display group number XXX
```

- Press keys 0, 0 and 1 for "Display group number 1" and confirm entry with Q key.

-> Indicated on display:
(1...4 = Display zones)

```
Read measured value block 1
     1     2     3     4
```

- Check setting conditions in display zone 4. Do not continue with check until specification has been attained:
  Specification: 00000010

  Significance of numbers in 8-digit number block
  => Page 24 .

- Allow engine to idle for at least 1 minute.

Checking idling speed

- Check idling speed in display zone 1.
  Specification: 820...940 rpm1)

  1) Up-to-date specifications:

=> Exhaust emissions test binder

- Press ⇒key.
- Press keys 0 and 6 for the function "End output" and confirm entry with the Q key.

If the idling speed is not obtained:

- Adapt engine control unit to throttle valve control part => Page 106 .
- Carry out test drive.

Observe the valid safety precautions when carrying out a road test => Page 59 .

- Again interrogate the control unit fault memory.
- Repeat the idling check.

If the specifications are not obtained again:

- Check throttle valve control part
  => Page 65 .
- Check the operating condition of engine
  => Page 98 .
- Check intake system for leaks (unmetered air) => Page 92 .

Protected by copyright. Copyright by Volkswagen AG. Copyright by Volkswagen AG. Volkswagen AG does not guarantee or accept any liability with respect to the correctness of information in this document. Copyright by Volkswagen AG. Reproduction in part or in whole, is not permitted unless authorised by Volkswagen AG. Volkswagen AG does not guarantee or accept any liability with respect to the correctness of information in this document. Copyright by Volkswagen AG.
satelettronica

- Check the signals from/to air conditioning system
  => Page 111 .

3.3 - Checking Lambda probe and Lambda regulation

Note:

Only gold-plated contacts may be used when servicing Lambda probe connector contacts 3 and 4.

Special tools, workshop equipment, testers, measuring instruments and auxiliary items required

- Hand multimeter V.A.G 1526 or multimeter V.A.G 1715
- Fault reader V.A.G 1551 (or vehicle system tester V.A.G 1552) with cable V.A.G 1551/3
- Adapter set V.A.G 1594
- Test box V.A.G 1598/22

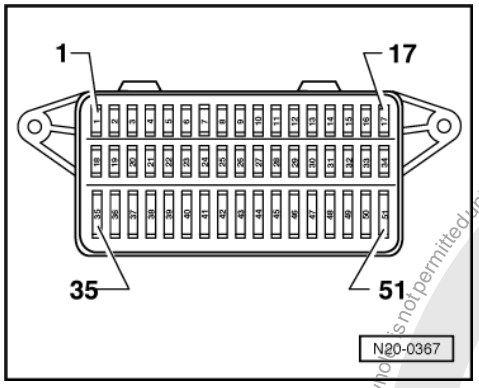

- Current flow diagram

Check conditions

- -> The fuses 1, 31 and 36 must be OK.
- The battery voltage must be at least 11.5 V.
- Earth connection in plenum chamber OK.

- Exhaust system between catalyst and cylinder head must be free of leaks
- All electrical consumers, e.g. lights and rear window heating must be switched off.
- If the vehicle is equipped with an air conditioner, this must be switched off.
- On vehicles with an automatic gearbox the selector lever must be in P or N.
- No faults must be stored in fault memory => Page 9 , interrogating and erasing fault memory.
- Coolant temperature must be at least 80 °C, =>Display group 01, display zone 2.

Functional check

- Connect fault reader V.A.G 1551 (V.A.G 1552). Start engine and select "Address word" 01 of engine control unit. When doing this the engine must be running at idling speed.
  (Connecting fault reader and selecting engine control unit => Page 2 .)

-> Indicated on display:

```
Rapid data transfer      HELP
Select function XX
```

- Press keys 0 and 8 for the function "Read measured value block" and confirm entry with Q key.

-> Indicated on display:

```
Read measured value block
Input display group number XXX
```

Reproduction or copy in part or in whole is not permitted unless authorised by Volkswagen AG. Volkswagen AG does not guarantee or accept any liability with respect to the correctness of information in this document. Copyright by Volkswagen AG.
satelettronica

- Press keys 0, 0 and 1 for "Display group number 1" and confirm entry with Q key.

-> Indicated on display:
(1...4 = Display zones)

```
Read measured value block 1
     1     2     3     4
```

- Check whether the coolant temperature is above 80 °C in display zone 2.
- Change to display group 20 as follows:
- Press C key.

-> Indicated on display:

```
Read measured value block
Input display group number XXX
```

- Press keys 0, 2 and 0 for "Display group number 20" and confirm entry with Q key.

-> Indicated on display:
(1...4 = Display zones)

```
Read measured value block 20
     1     2     3     4
```

- Checking Lambda control operating condition in display zone 4:

Lambda control operating condition display:

- No fault in fault memory:

  1st position from left must display 0
  Display: 0xxxxxxx

- Lambda regulation not at limit:

  5th position from left must display 0
  Display: xxxx0xxx

- Lambda regulationactive:

  6th position from left must display 1
  Display: xxxxx1xx

- Lambda probe operationally ready:

  7th position from left must display 1
  Display: 00000010

- Condition of mixture:

  8th position from left must display 0 and 1 alternately.
  - Display: xxxxxxx0 = lean mixture
  - Display: xxxxxxx1 = rich mixture

Observe notes concerning figures in 8-digit number block => Page 35 .

Note:

The other positions can show 1 or 0.

- Press C key.
- Press keys 0, 0 and 1 for "Display group number 1" and confirm entry with Q key.

-> Indicated on display:

Protected by copyright. Copyright by Volkswagen AG. Volkswagen AG does not guarantee, acceptany liability with respect to the correctness of information in this document. Copying for private or commercial purposes, in part or in whole, is not permitted unless authorised by Volkswagen AG.
satelettronica

(1...4 = Display zones)

```
Read measured value block 1
     1     2     3     4
```

- Check Lambda probe voltage in display zone 3.
  The voltage must fluctuate
  at least 30 times per minute
  in the range of
  0.00...1.00 V.
- Press ⇒key.
- Press keys 0 and 6 for the function "End output" and confirm entry with the Q key.
- Switch off ignition.
- Perform check according to following table:

Appears on display	Possible fault cause	Fault elimination
Fluctuates at least 30 times per minute in range of 0.00...1.00 V	- Lambda probe and Lambda regulation OK	---
Constant approx. 5.00 V	- Short to positive via: - Lambda probe, probe wiring, earth wiring, engine control unit	- Check Lambda probe wiring => Page 98
Constant between 1.50...1.60 V	- Wiring open circuit via: - Fuse, Lambda probe, probe wire, earth wire, engine control unit	
Constant about 0.00 V	- Short to earth via: - Lambda probe, probe wire, earth wire, engine control unit	

If the specifications for Lambda control operating conditions are not attained or the probe voltage does not fluctuate as stated:

- Check Lambda probe heating => Page 60 .
- Check Lambda probe for soot. Renew if necessary=> Page 49 , item 25 .

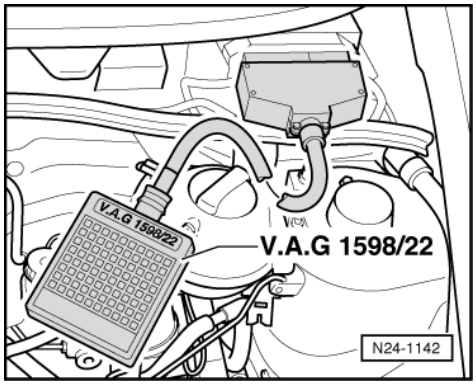

Protected by copyright. Copyright by Volkswagen AG.
Copyright by Volkswagen AG. Volkswagen AG does not guarantee or accept any liability with respect to the correctness of information in this document.
Copying for private or commercial purposes, in part or in whole, is not permitted unless authorised by Volkswagen AG.
satelitronica

Checking Lambda probe wiring

- -> Connect test box V.A.G 1598/22 to control unit wiring harness.

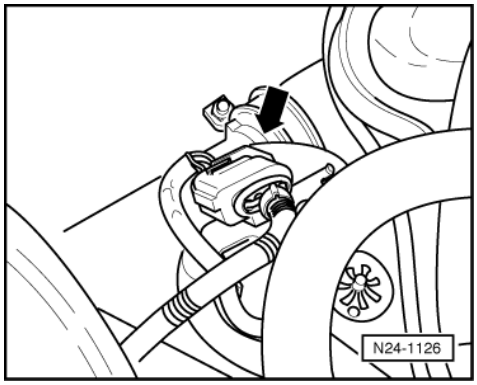

- -> Separate 4-pin connector (brown) to Lambda probe (G39) -arrow-.

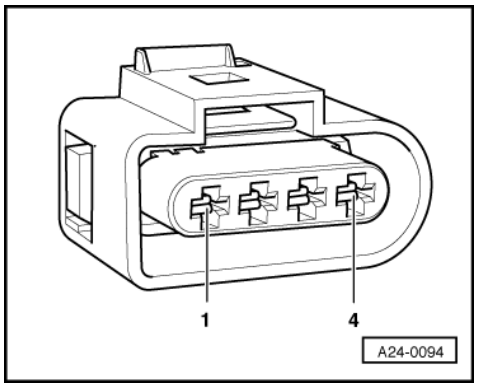

- -> Check wiring for open circuit between test box and 4-pin connector using current flow diagram.
  Contact 3 and test box connector 25
  Contact 4 and test box connector 26
  Wire resistance: max. 1.5 ω
- Additionally check wiring at 4-pin connector for short to one another.
  Specification: ∞ω

If no wiring fault is detected:

- Renew Lambda probe (G39)
  =>Page 49 , item 25 .
- Interrogate fault memory, if necessary, repair any faults and then erase fault memory => Page 9 , interrogating and erasing fault memory.

3.4 - Checking engine operating mode

Note:

Checks whether engine control unit recognises the engine operating modes idling, overrun, partial throttle and full throttle.

Special tools, workshop equipment, testers, measuring instruments and auxiliary items required

- Fault reader V.A.G 1551 (or vehicle system tester V.A.G 1552) with cable V.A.G 1551/3

Protected by copyright. Copying for private or commercial purposes, in part or in whole, is not permitted unless authorised by Volkswagen AG. Volkswagen AG does not guarantee or accept any liability with respect to the correctness of information in this document. Copyright by Volkswagen AG.
satelettronica

Check conditions

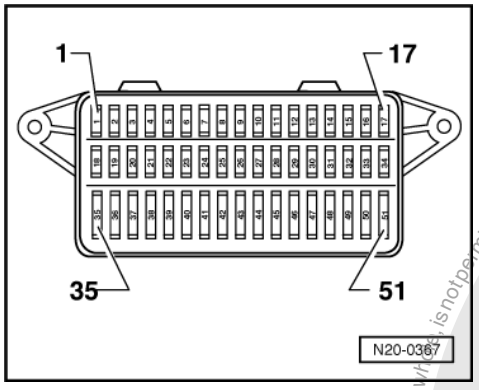

- -> Fuses 13 and 36 must be OK.
- Coolant temperature must be at least 80 °C, =>Display group 01, display zone 2.
- Throttle cable adjustment must be OK, checking:

=> Repair group 20; Accelerator mechanism; Adjusting accelerator cable Accelerator mechanism Adjusting accelerator cable

Test sequence

- Connect fault reader V.A.G 1551 (V.A.G 1552). Start engine and select "Address word" 01 of engine control unit. When doing this the engine must be running at idling speed.
  (Connecting fault reader and selecting engine control unit => Page 2 .)

-> Indicated on display:

```
Rapid data transfer      HELP
Select function XX
```

- Press keys 0 and 8 for the function "Read measured value block" and confirm entry with Q key.

-> Indicated on display:

```
Read measured value block
Input display group number XXX
```

- Press keys 0, 0 and 1 for "Display group number 1" and confirm entry with Q key.

-> Indicated on display:
(1...4 = Display zones)

```
Read measured value block 1
     1     2     3     4
```

- Check whether the coolant temperature is above 80 °C in display zone 2.
- Change to display group 2 as follows:
  V.A.G 1551: Press key 3
  V.A.G 1552: Press key ↑

-> Indicated on display:
(1...4 = Display zones)

```
Read measured value block 2
     1     2     3     4
```

- Check whether the control unit recognises the operating mode (display zone 4):

◆ Overrun mode:

- Increase engine speed to above 3000 rpm.

Protected by copyright. Copying for private or commercial purposes, in part or in whole, is not permitted unless authorised by Volkswagen AG. Volkswagen AG does not guarantee or accept any liability with respect to the correctness of information in this document. Copyright by Volkswagen AG.
satelettronica

- Close throttle abruptly.

  1st position from left must display 1 at engine speeds above 1500 rpm
  Display: 1xxx

◆ Idling:

  2nd position from left must display 1
  Display: x1xx

◆ Part throttle:

- Rev up evenly.

  3rd position from left must display 1
  Display: xx1x

◆ Full throttle:

- Floor accelerator pedal (onto throttle valve stop).

  4th position from left must briefly display 1
  Display: xxx1

Note:

A test drive may have to be performed to show "Full throttle" in display.

Observe the valid safety precautions when carrying out a road test => Page 59 .

- Press ⇒key.
- Press keys 0 and 6 for the function "End output" and confirm entry with the Q key.
- Switch off ignition.

If the specifications are not attained:

- Interrogate fault memory, if necessary, repair any faults and then erase fault memory => Page 9 , interrogating and erasing fault memory.
- Check accelerator mechanism for ease of operation.
- Check throttle valve potentiometer
  => Page 65 , Checking throttle valve control part.

3.5 - Checking intake manifold change-over

Thus check need only be carried out when performance is poor.

Special tools, workshop equipment, testers, measuring instruments and auxiliary items required

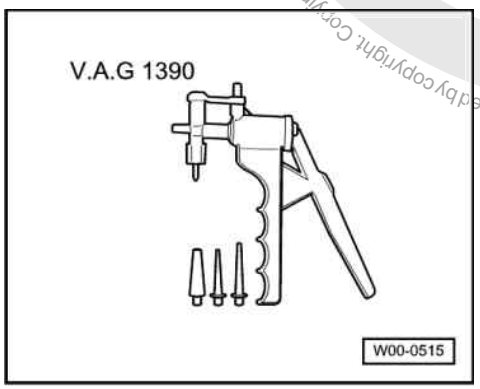

Protected by copyright. Copyright by Volkswagen AG.
Copying for private or commercial purposes, in whole or in part, is not permitted unless authorised by Volkswagen AG. Volkswagen AG does not guarantee or accept any liability with respect to the correctness of information in this document.
satelettronica

- V.A.G 1390 Hand vacuum pump
- Hand multimeter V.A.G 1526 or multimeter V.A.G 1715
- Fault reader V.A.G 1551 (or vehicle system tester V.A.G 1552) with cable V.A.G 1551/3
- Adapter set V.A.G 1594
- Test box V.A.G 1598/22
- Current flow diagram

Checking function

- Start engine and run at idling speed.

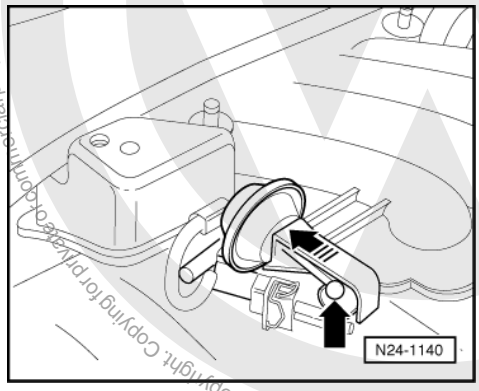

- Increase engine speed abruptly (throttle burst). The intake manifold change-over vacuum unit must operate in direction of arrow during this.

If change-over does not occur, the following checks must be carried out.

- Switch off ignition.
- First check activation of twin path intake manifold change-over valve (N156) via final control diagnosis => Page 16 .

If activation is OK:

- The fault reader or the vehicle system tester must remain connected.

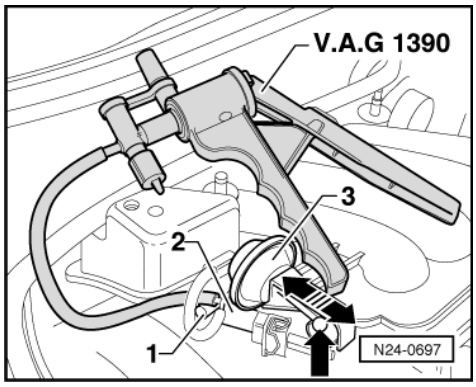

- -> Pull vacuum hose -1- off intake manifold change-over valve -2- and connect hand vacuum pump V.A.G 1390 to connection.
- Perform final control diagnosis again. When the valve for intake manifold change-over is activated, operate hand pump uniformly.
  The actuator -3- must switch to and fro between both positions.

If the change-over does not function as described:

- Check change-over mechanics for freedom of movement. To do this operate rods by hand.
- Check vacuum pipes for correct connection.
- Check vacuum system including vacuum reservoir in intake manifold upper part for leaks.

Copyright by Volkswagen AG. Volkswagen AG does not guarantee or accept any liability with respect to the correctness of information in this document. Copying for private or commercial purposes, in part or in whole, is not permitted unless authorised by Volkswagen AG.
satelettronica

4 - Engine control unit

4.1 - Engine control unit

4.2 - Function

The engine control unit regulates the injection, throttle valve control part, Lambda regulation, ignition, knock control, activated charcoal filter solenoid valve 1, engine speed governor via injectors or fuel pump relay, intake manifold change-over as well as self-diagnosis.

4.3 - Checking control unit voltage supply

Special tools, workshop equipment, testers, measuring instruments and auxiliary items required

- Hand multimeter V.A.G 1526 or multimeter V.A.G 1715
- Fault reader V.A.G 1551 (or vehicle system tester V.A.G 1552) with cable V.A.G 1551/3
- Adapter set V.A.G 1594
- Test box V.A.G 1598/22
- Current flow diagram

Check conditions

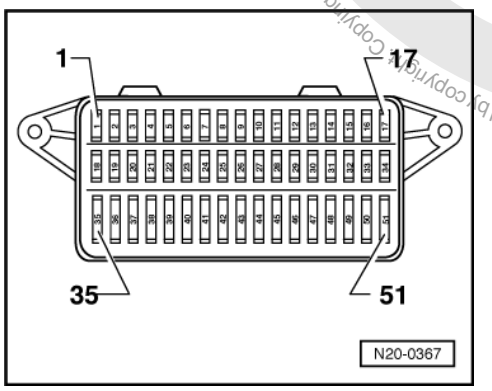

- -> Fuses 13 and 36 must be OK.
- The battery voltage must be at least 11.5 V.
- Earth connection in plenum chamber OK.
- All electrical consumers, e.g. lights and rear window heating must be switched off.
- If the vehicle is equipped with an air conditioner, this must be switched off.
- Alternator OK, checking:

=> Current flow diagrams, Electrical fault finding and Fitting locations

Test sequence

- Connect fault reader V.A.G 1551 (V.A.G 1552). Start engine and select "Address word" 01 of engine control unit. When doing this the engine must be running at idling speed.
  (Connecting fault reader and selecting engine control unit => Page 2 .)

-> Indicated on display:

```
Rapid data transfer      HELP
Select function XX
```

- Press keys 0 and 8 for the function "Read measured value block" and confirm entry with Q key.

-> Indicated on display:

Protected by copyright. Copying for private and commercial purposes, in part or in whole, is not permitted unless authorised by Volkswagen AG. Volkswagen AG does not guarantee or accept any liability with respect to the correctness of information in this document. Copyright by Volkswagen AG.
satelettronica

```
Read measured value block
Input display group number XXX
```

- Press keys 0, 0 and 5 for "Display group number 5" and confirm entry with Q key.

-> Indicated on display:
(1...4 = Display zones)

```
Read measured value block 5
     1     2     3     4
```

- Read off figure displayed in display zone 2.
  Specification: At least 11.50 V
- Press the ⇒key.
- Press keys 0 and 6 for the "End output" function and confirm input with the Q key.

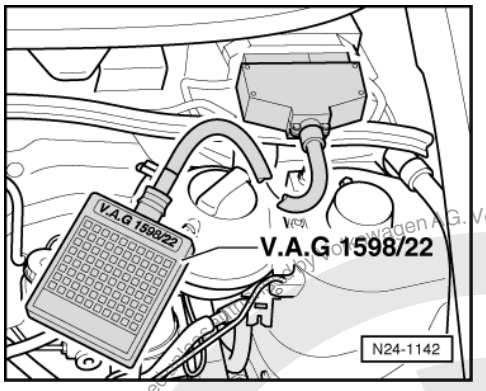

- Switch off ignition.

If the specification is not attained:

- -> Connect test box V.A.G 1598/22 to control unit wiring harness.

Checking voltage supply terminal 30

- Measure supply voltage between test box sockets 2+3 using multimeter and adapter cables from V.A.G 1594:
  Specification: min. 11.5 V

If the specification is not attained:

- Check wiring to fuse carrier and earth connection of engine control unit using current flow diagram:

=> Current flow diagrams, Electrical fault finding and Fitting locations

Checking voltage supply terminal 15

- Measure supply voltage between test box sockets 1+2 using multimeter and cables from V.A.G 1594.
- Switch on ignition.
  Specification: min. 11.5 V

If the specification is not attained:

- Check wiring to fuse carrier and earth connection of engine control unit using current flow diagram:

=> Current flow diagrams, Electrical fault finding and Fitting locations

Copyright by Volkswagen AG. Volkswagen AG does not guarantee or accept any liability with respect to the correctness of information in this document.
Protected by copyright. Copying for private or commercial purposes, in whole or in part, is not permitted.
satelettronica

4.4 - Replacing engine control unit

Special tools, workshop equipment, testers, measuring instruments and auxiliary items required

- Fault reader V.A.G 1551 with cable V.A.G 1551/3

Work sequence

- First print out the control unit identification and thereby the previous control unit coding as follows:
- Connect the fault reader V.A.G 1551 (V.A.G 1552). Then switch ignition on and select engine control unit with the "Address word" 01.
  (Connecting fault reader and selecting engine control unit => Page 2 .)

-> The control unit identification and coding are indicated on the display, e.g.:

```
6K0906019 1.6 ltr. R4/2V SIMOS ATS073
Coding 10003     WSC XXXXX
```

- Print out the control unit identification by pressing the fault reader print button.
- Press ⇒ key.
- Press keys 0 and 6 for the function "End output" and confirm entry with the Q key.

-> Indicated on display:

```
Rapid data transfer     HELP
Select function XX
```

- Switch off ignition.
- Remove left cover for plenum chamber.
- Release connector from control unit and pull off.

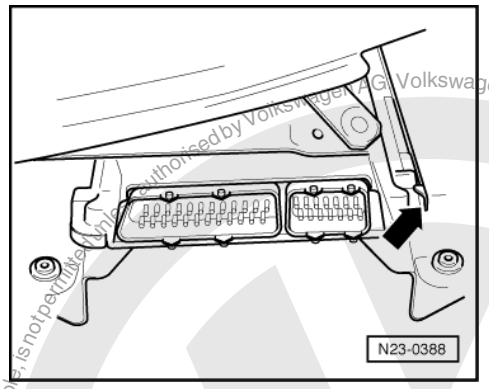

- -> Press retaining lug to the right -arrow- and pull control unit out of bracket.

Installing

- Place the new control unit into the retaining frame.
- Install control unit connector and lock.
- Check the previous coding and the coding of the new control unit => Page 105 .
- Adapt new control unit to the electronic immobilizer.

=> Electrical system; Repair group 01; Immobilizer self-diagnosis; Adaption following renewal of engine control unit Immobilizer self-diagnosis Adaption following renewal of engine control unit

- Interrogate fault memory, if necessary, repair any faults and then erase fault memory => Page 9 , interrogating and erasing fault memory.
- Adapt new control unit to throttle valve control part => Page 106 .
- Perform idling speed check
  => Page 93 .
- Carry out test drive.

Protected by copyright. Copyright by Volkswagen AG. Volkswagen AG does not guarantee or accept any liability with respect to the correctness of information in this document. Copyright by Volkswagen AG. Reproduction, in whole or in part, is not permitted without authorised by Volkswagen AG for commercial purposes, in part or in whole, is not permitted.
satelettronica

Observe the valid safety precautions when carrying out a road test => Page 59 .

During the road test the following operating conditions must be fulfilled:
- The coolant temperature must exceed 80 °C .
- When the temperature is reached, the operating conditions
  Idling
  Part throttle
  Enrichment
  Full throttle
  Overrun
  must be attained several times.

- Again interrogate the control unit fault memory.

4.5 - Coding engine control unit

Notes:

- A 5-character code must always be displayed during the control unit identification.
- The control unit must be recoded if the vehicle relevant coding is not displayed or the control unit has been renewed.

Special tools, workshop equipment, testers, measuring instruments and auxiliary items required

- Fault reader V.A.G 1551 with cable V.A.G 1551/3

Work sequence

- Connect the fault reader V.A.G 1551 (V.A.G 1552). Then switch ignition on and select engine control unit with the "Address word" 01.
  (Connecting fault reader and selecting engine control unit => Page 2 .)

-> Indicated on display:

```
Rapid data transfer      HELP
Select function XX
```

- Press keys 0 and 7 for the function "Coding control unit" and confirm entry with Q key.

-> Indicated on display:

```
Coding control unit      Q
Enter code number XXXXX      (0-32000)
```

- Enter the relevant code number for this vehicle and confirm with Q key.

  Coding variations for engine control unit => Page 106 .

-> The control unit identification and coding are indicated on the display, e.g.:

```
6K0906019 1.6 ltr. R4/2V SIMOS ATS073
Coding 10003     WSC XXXXX
```

- Press ⇒ key.
- Press keys 0 and 6 for the function "End output" and confirm entry with the Q key.
- Switch off ignition and wait for control unit run-on to end (approx. 25 seconds).

-> Indicated on display when a non-authorised code number has been entered:

```
Function is not recognised or cannot
be performed at the moment.
```

Protected by copyright. Copying for private or commercial purposes, in part or in whole, is not permitted unless authorised by Volkswagen AG. Volkswagen AG does not guarantee or accept any liability with respect to the correctness of information in this document. Copyright by Volkswagen AG.
satelettronica

Note:

The engine control unit doesn't store the entered code (shown on display) until ignition has been switched off and control unit run-on has ended (25 seconds). Incorrect coding could lead to:

- Engine running faults (gear change jerks, load change jerks, etc.)
- Increased fuel consumption
- Increased emissions
- Faults stored in fault memory which are not actually present
- Reduced gearbox life
- Functions will not be performed (Lambda regulation, activation of the activated charcoal filter system, etc.).

4.6 - Coding variations of engine control unit

1st position: Vehicle code	2nd position: Emissions code	3rd position: Special code	4th position: CAN data bus code	5th position: Gearbox code
0 = No coding	0 = No coding	0 = No coding	0 = Without ABS ABS without data bus	0 = No coding
1 = Polo Classic, Polo Estate	1 = ---	1 = ---	1 = ABS with data bus	1 = 5-speed manual gearbox
2 = ---	2 = ---	2 = ---	2 = ---	2 = 6-speed manual gearbox
3 = ---	3 = ---	3 = ---	3 = ---	3 = Automatic gearbox
4 = ---	4 = ---	4 = ---	4 = ---	4 = ---
5 = ---	5 = ---	5 = ---	5 = ---	5 = ---

Note:

The code number is compiled as shown in the following example:

1st position: Vehicle code (Polo Classic)	1				
2nd position: Emissions code (no code at present)		0			
3rd position: Special code (no code a present)			0		
4th position: CAN data bus code (ABS without data bus)				0	
5th position: Gearbox code (5-speed manual gearbox)					1
Code number:	1	0	0	0	1

4.7 - Adapting engine control unit to throttle valve control part

Function

Adapting teaches the engine control unit (with ignition switched on and engine not running) the throttle valve control part stop positions and a comparison graph between throttle valve potentiometer and throttle valve positioner sender.

Adapting sequence must be performed if:

- The throttle valve control unit is removed and installed
- The throttle valve control unit is renewed
- If when installing another engine another throttle valve control unit is installed

Special tools, workshop equipment, testers, measuring instruments and auxiliary items required

- Fault reader V.A.G 1551 (or vehicle system tester V.A.G 1552) with cable V.A.G 1551/3

Protected by copyright. Copyright by Volkswagen AG. Volkswagen AG does not guarantee or accept any liability with respect to the correctness of information in this document. Copyright by Volkswagen AG. Not permitted for commercial purposes, in part or in whole, without the express authorised by Volkswagen AG.
satelettronica

Check conditions

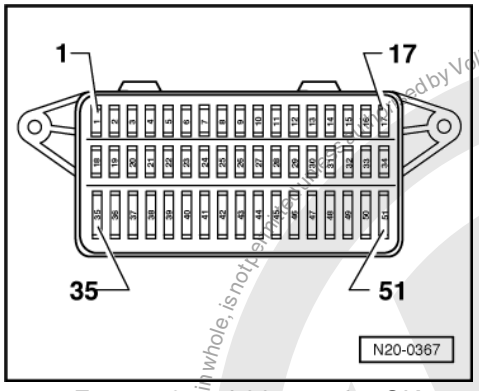

- -> Fuses 13 and 36 must be OK.
- The battery voltage must be at least 11.5 V.
- All electrical consumers, e.g. lights and rear window heating must be switched off
- If the vehicle is equipped with an air conditioner, this must be switched off.
- On vehicles with an automatic gearbox the selector lever must be in P or N.
- Throttle cable adjustment must be OK, checking:

=> Repair group 20; Accelerator mechanism; Adjusting accelerator cable Accelerator mechanism Adjusting accelerator cable

- The throttle valve must be at idling speed position (The accelerator must not be operated during the test).
- The throttle valve part must not be dirty (carbonization).
- No faults must be stored in fault memory => Page 9 , interrogating and erasing fault memory.

Work sequence

- Connect the fault reader V.A.G 1551 (V.A.G 1552). Then switch ignition on and select engine control unit with the "Address word" 01.
  (Connecting fault reader and selecting engine control unit =>Page 2 .)

-> Indicated on display:

```
Rapid data transfer      HELP
Select function XX
```

- Press keys 0 and 4 for the function "Introduction of basic setting" and confirm entry with Q key.

-> Indicated on display:

```
Basic setting
Input display group number XXX
```

- Press keys 0, 9 and 8 for "Display group number 98" and confirm entry with Q key.
- Observe operating mode of throttle valve control part in display zone 3.

  Significance of figures in 8-digit number block
  => Page 28 .

- Observe adaption mode of throttle valve control part in display zone 4.

  Significance of numbers in 2-digit number block
  => Page 37 .

-> Indicated on display:

```
System in basic setting 98
     x.xx V     x.xx V     00000000
01
```

satelettronica

After pressing the Q-key the throttle valve positioner is driven to Min., Max. and five intermediate positions and the relevant throttle valve angle stored in non-volatile memory. This procedure takes approx. 10 seconds. The throttle valve then remains in the start position for a brief period then closes.

-> Indicated on display:

```
System in basic setting 98
     x.xx V     x.xx V     00000100
00
```

The adaption of the engine control unit to the throttle valve control part is now complete.

Note:

If one of the following readouts appears on the display, this means that the adaption has not been completed successfully:

-> Indicated on display:

```
System in basic setting 98
     x.xx V     x.xx V     00001100
10
```

-> Indicated on display:

```
Basic setting not completed
Implausible signal
```

Notes:

If the adaption of the control unit is interrupted, the reason could be one of the following:

- The test conditions are not fulfilled.
- Throttle valve control part or wiring is defective => Page 65 Checking throttle valve control part.
- The throttle valve cannot reach the mechanical idling stop because of a build-up of dirt (e.g. oil carbon deposits) or an incorrectly adjusted throttle cable.

After an interruption the fault "Basic setting not completed; Implausible signal" is recorded in fault memory.

The next time the ignition is switched on the engine control unit will try to perform the adaption again.

- Terminate engine basic setting by pressing the⇒ button.
- Press keys 0 and 6 for the function "End output" and confirm entry with the Q key.
- Switch off ignition.

Note:

The ignition must remain switched off for at least 15 seconds so as to store the basic setting.

- Check the operating mode of the throttle valve control part => Page 65 , Checking throttle valve control part.

5 - Checking additional signals

5.1 - Checking additional signals

5.2 - Testing speed signal

Special tools, workshop equipment, testers, measuring instruments and auxiliary items required

- Hand multimeter V.A.G 1526 or multimeter V.A.G 1715
- Fault reader V.A.G 1551 (or vehicle system tester V.A.G 1552) with cable V.A.G 1551/3

Protected by copyright. Copyright by Volkswagen AG. Volkswagen AG does not guarantee or accept any liability with respect to the correctness of information in this document. Copying for private or commercial purposes, in part or in whole, is not permitted unless authorised by Volkswagen AG.
satelettronica

- Adapter set V.A.G 1594
- Test box V.A.G 1598/22
- Current flow diagram

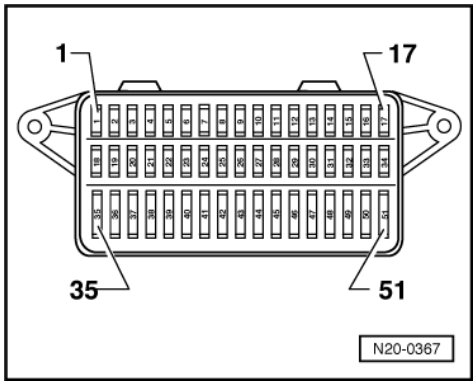

Check conditions

- -> Fuses 13 and 36 must be OK.
- The battery voltage must be at least 11.5 V.
- Earth connection in plenum chamber OK.
- All electrical consumers, e.g. lights and rear window heating must be switched off.
- If the vehicle is equipped with an air conditioner, this must be switched off.
- On vehicles with an automatic gearbox the selector lever must be in P or N.
- No faults must be stored in fault memory => Page 9 , interrogating and erasing fault memory.
- Speedometer must be OK., checking speedometer:

=> Electrical system; Repair group 90

Test sequence

Note:

To check the speed signal the vehicle must be driven. To do this a second person is necessary.

Warning! Secure fault reader to rear seat and operate from this position.

Observe the valid safety precautions when carrying out a road test => Page 59 .

- Connect fault reader V.A.G 1551 (V.A.G 1552). Start engine and select "Address word" 01 of engine control unit. When doing this the engine must be running at idling speed.
  (Connecting fault reader and selecting engine control unit => Page 2 .)

-> Indicated on display:

```
Rapid data transfer      HELP
Select function XX
```

- Press keys 0 and 8 for the function "Read measured value block" and confirm entry with Q key.

-> Indicated on display:

```
Read measured value block
Input display group number XXX
```

- Press keys 0, 0 and 2 for "Display group number 2" and confirm entry with Q key.

-> Indicated on display:
(1...4 = Display zones)

```
Read measured value block 2
     1     2     3     4
```

Protected by copyright. Copyright by Volkswagen AG. Volkswagen AG does not guarantee or accept any liability with respect to the correctness of information in this document. Copyright by Volkswagen AG. Reproduction for private or commercial purposes, in part or in whole, is not permitted unless authorised by Volkswagen AG.
satelettronica

- Carry out test drive with a 2nd person to observe display.
- Observe figure displayed in display zone 3:
  Specification: approx. driven speed
- Drive slower. The displayed value must
  decrease.
- Press the ⇒key.
- Press keys 0 and 6 for the "End output" function and confirm input with the Q key.
- Switch off ignition.

If no speed is indicated or the display values reduce when driving slowly:

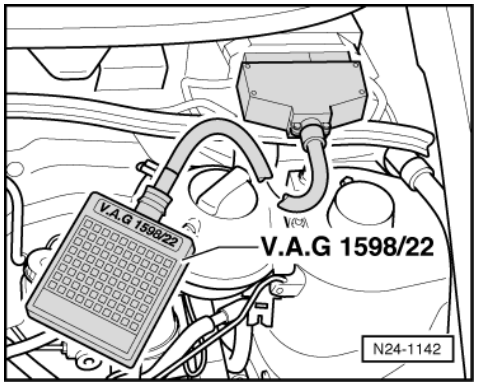

- -> Connect test box V.A.G 1598/22 to control unit wiring harness.
- Connect multimeter to measure voltage between test box sockets 3 (terminal 30) + 20 (road speed signal).
- Raise front left side of vehicle.
- Switch on ignition.
- Rotate front wheel and observe voltage display.
  Specification: 0.0...at least 4.0 Volt fluctuating

Note:

If necessary, hold the front right wheel to prevent it from turning.

If the display does not fluctuate:

- Check wiring for open circuit or short circuit from test box socket 20 to dash panel insert using current flow diagram:

=> Current flow diagrams, Electrical fault finding and Fitting locations

5.3 - Checking engine speed signal

Function

The engine speed signal is emitted from contact 6 of engine control unit. The signal is necessary amongst other things for the automatic gearbox control unit (J217) to calculate the shift points and for the rev counter in dash panel insert.

Special tools, workshop equipment, testers, measuring instruments and auxiliary items required

- Hand multimeter V.A.G 1526 or multimeter V.A.G 1715
- Adapter set V.A.G 1594
- Test box V.A.G 1598/22
- Current flow diagram

Test conditions

- No faults must be stored in fault memory => Page 9 , interrogating and erasing fault memory.

Protected by copyright. Copying for private or commercial purposes, in part or in whole, is not permitted unless authorised by Volkswagen AG. Volkswagen AG does not guarantee or accept any liability with respect to the correctness of information in this document. Copyright by Volkswagen AG.
satelettronica

Copyright by Volkswagen AG. Volkswagen AG does not guarantee or accept any liability with respect to the correctness of information in this document. Copyright by Volkswagen AG. Copying for private or commercial purposes, in part or in whole, is not permitted unless authorised by Volkswagen AG.

Test sequence

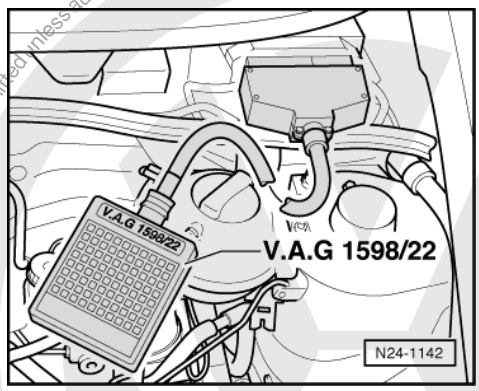

- -> Connect test box V.A.G 1598/22 to control unit wiring harness.
- Check wiring for open circuit or short circuit from test box socket 6 to dash panel insert using current flow diagram:

=> Current flow diagrams, Electrical fault finding and Fitting locations

5.4 - Checking signal from/to air conditioning system

Function

Air conditioner compressor signal:
Just before the air conditioner compressor is switched on, the voltage is sent to the engine control unit. The signal ensures that once the air conditioner is switched on, idling speed will not drop drastically.

Switching off air conditioner compressor:
In order that engine performance is not impaired when accelerating, the A/C compressor is switched off briefly when accelerating from start or from low engine revs.

Air conditioner readiness:
When the air conditioner is switched on the engine control unit receives the information: air conditioning system is switched on. This "PWM signal" (pulse width modulation) can be used to pre-control the idling speed.

Special tools, workshop equipment, testers, measuring instruments and auxiliary items required

- Hand multimeter V.A.G 1526 or multimeter V.A.G 1715
- Fault reader V.A.G 1551 (or vehicle system tester V.A.G 1552) with cable V.A.G 1551/3
- Adapter set V.A.G 1594
- Test box V.A.G 1598/22

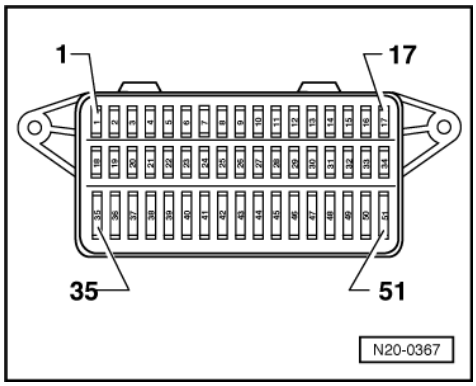

- Current flow diagram

satelettronica

Test conditions

- -> Fuses 13 and 36 must be OK.
- The battery voltage must be at least 11.5 V.
- Earth connection in plenum chamber OK.
- All electrical consumers, e.g. lights and rear window heating must be switched off.
- Air conditioner functioning OK.
- Air conditioner must be switched off
- Vehicle at room temperature (warmer than + 15 °C).
- No faults must be stored in fault memory
  => Page 9 , interrogating fault memory

Test sequence

- Connect fault reader V.A.G 1551 (V.A.G 1552). Start engine and select "Address word" 01 of engine control unit. When doing this the engine must be running at idling speed.
  (Connecting fault reader and selecting engine control unit => Page 2 .)

-> Indicated on display:

```
Rapid data transfer     HELP
Select function XX
```

- Press keys 0 and 8 for the function "Read measured value block" and confirm entry with Q key.

-> Indicated on display:

```
Read measured value block
Input display group number XXX
```

Checking air conditioner compressor signal and air conditioner switch-off

- Press keys 0, 1 and 9 for "Display group number 19" and confirm entry with Q key.

-> Indicated on display:
(1...4 = Display zones)

```
Read measured value block 19
     1     2     3     4
```

- Check operating mode of air conditioner in display zone 3.
  Display: 0
- Check operating mode of air conditioner compressor in display zone 4:

  8th position from left must display 0
  Display: xxxxxxx0
  Significance of 8-digit display in number block
  => Page 35 .

- Switch on air conditioning system.
- Select lowest temperature and highest blower speed.
- Check operating mode of air conditioner in display zone 3.
  Display: 1
- Check operating mode of air conditioner compressor in display zone 4:

  8th position from left must display 1
  Display: xxxxxxx1

- Carry out test drive with a 2nd person to observe display.

Observe the valid safety precautions when carrying out a road test => Page 59 .

Note:

A road test is required to test the shut-off function.

- Select 1st gear (or 1st driving range of vehicles with automatic gearbox).
- Accelerate rapidly and then release gas pedal.

Protected by copyright. Copyright by Volkswagen AG. Volkswagen AG does not guarantee or accept any liability with respect to the correctness of information in this document. Copyright by Volkswagen AG. Copying for private or commercial purposes, in part or in whole, is not permitted unless authorised by Volkswagen AG.
satelettronica

- Check operating mode of air conditioner compressor in display zone 4:

  8th position from left must change from
  xxxxxxx1
  to
  xxxxxxx0
  for a few seconds (compressor shut-off during acceleration).
  All the while, the display for air conditioner operating mode in display zone 3 remains a constant 1.

- Press the ⇒key.
- Switch off air conditioning system.

If the display changes as described:

- Checking air conditioner readiness => Page 113 .

If the displays do not change as described:

- Press keys 0 and 6 for the "End output" function and confirm input with the Q key.
- Switch off ignition.

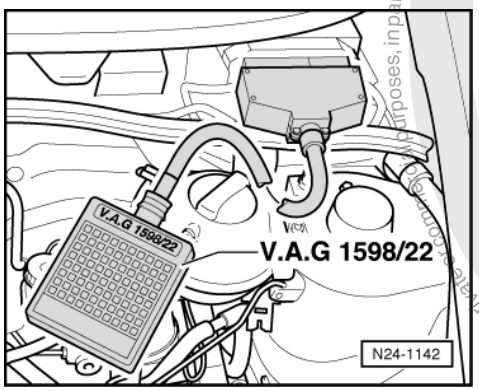

- -> Connect test box V.A.G 1598/22 to control unit wiring harness.
- Check wiring for open circuit between test box socket 8 and the air conditioner using current flow diagram.
  Wire resistance: max. 1.5 ω
- Check wiring for open circuit between text box socket 10 and the air conditioner using current flow diagram.
  Wire resistance: max. 1.5 ω

Checking air conditioner readiness

Note:

The engine control unit receives a "PWM signal" from air conditioning system high pressure sender (G65), this allows the idling speed signal to be regulated more precisely.

- Press keys 0 and 8 for the function "Read measured value block" and confirm entry with Q key.

-> Indicated on display:

```
Read measured value block
Input display group number XXX
```

- Press keys 0, 5 and 7 for "Display group number 57" and confirm entry with Q key.

-> Indicated on display:
(1...4 = Display zones)

```
Read measured value block 57
     1     2     3     4
```

- Check duty cycle of high pressure sender (G65) of air conditioner in display zone 4.
  Specification: 1...5 %
- Switch on air conditioning system.

satelettronica

- Select lowest temperature and highest blower speed.
- Duty cycle of high pressure sender must rise in display zone 4.
  Specification: 10...70 % (fluctuating)
- Press the ⇒key.
- Press keys 0 and 6 for the "End output" function and confirm input with the Q key.
- Switch off ignition.

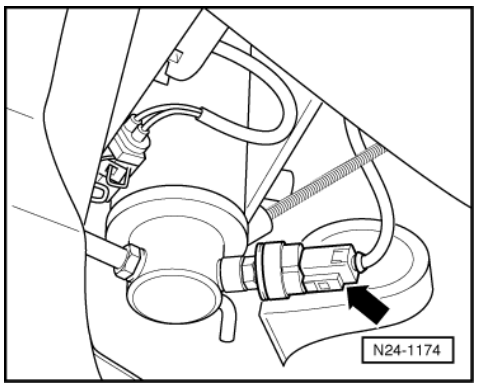

If the display does not change or remains at a constant 25 %:

- -> Pull 3-pin connector off air conditioning system high pressure switch (G65) -arrow-.

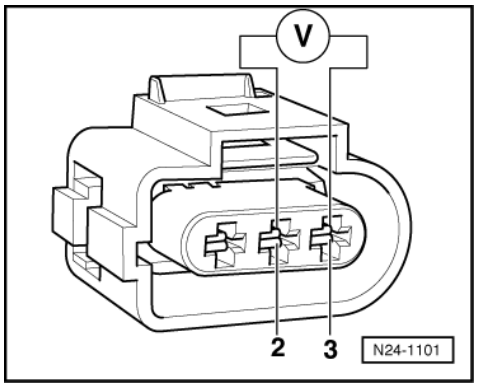

- -> Connect multimeter to measure voltage using aux. cables from V.A.G 1594 to contacts 2 (positive) and 3 (earth) of connector for high pressure sender.
- Switch on ignition.
  Specification: min. 11.5 V
- Switch off ignition.

If no voltage is present:

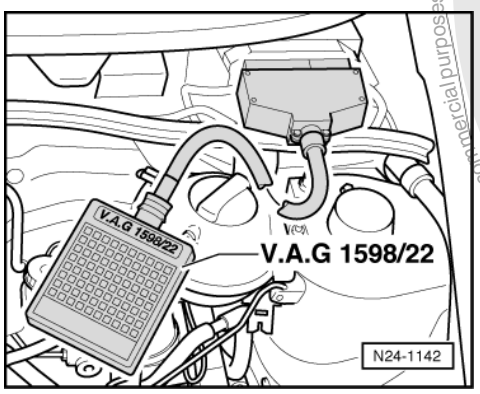

- -> Connect test box V.A.G 1598/22 to control unit wiring harness.

satelettronica
Reproduced by copyright. Copying for private or commercial purposes, in part or in whole, is not permitted unless authorised by Volkswagen AG. Volkswagen AG does not guarantee or accept any liability with respect to the correctness of information in this document. Copyright by Volkswagen AG.

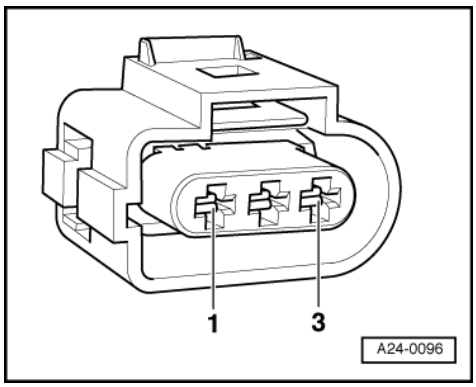

- -> Check wiring for open circuit between test box and 3-pin connector using current flow diagram:
  Contact 2 and test box socket 11
  Wire resistance: max. 1.5 ω
- Check wiring additionally for short to vehicle earth or battery positive.
  Specification: ∞ω

If no fault in wire is detected:

- Renew high pressure sender (G65)

=> Heating, Air conditioning, Repair group 87

- Interrogate fault memory, if necessary, repair any faults and then erase fault memory => Page 9 , interrogating and erasing fault memory.

5.5 - Checking driving range signal

Function

The engine control unit receives information from the automatic gearbox control unit via the CAN data bus wire:
Driving range selected (selector lever in 1/2/3/R/D)
or
No driving range selected (selector lever in P or N).

Special tools, workshop equipment, testers, measuring instruments and auxiliary items required

- Diode test lamp V.A.G 1527
- Adapter set V.A.G 1594
- Fault reader V.A.G 1551 (or vehicle system tester V.A.G 1552) with cable V.A.G 1551/3
- Test box V.A.G 1598/22
- Current flow diagram

Test conditions

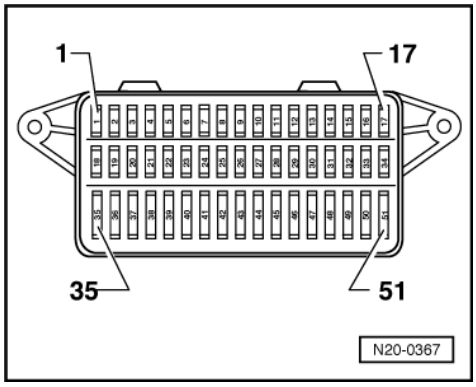

Protected by copyright. Copying for private or commercial purposes, in part or in whole, is not permitted unless authorised by Volkswagen AG. Volkswagen AG does not guarantee or accept any liability with respect to the correctness of information in this document. Copyright by Volkswagen AG.
satelettronica

Protected by copyright. Copying for private or commercial purposes, in part or in whole, is not permitted unless authorised by Volkswagen AG. Volkswagen AG does not guarantee or accept any liability with respect to the correctness of information in this document. Copyright by Volkswagen AG.

- -> Fuses 13 and 36 must be OK.
- The battery voltage must be at least 11.5 V.
- Earth connection in plenum chamber OK.
- All electrical consumers, e.g. lights and rear window heating must be switched off.
- On vehicles with an automatic gearbox the selector lever must be in P or N.

Test sequence

- Connect fault reader V.A.G 1551 (V.A.G 1552). Start engine and select "Address word" 01 of engine control unit. When doing this the engine must be running at idling speed.
  (Connecting fault reader and selecting engine control unit => Page 2 .)

-> Indicated on display:

```
Rapid data transfer      HELP
Select function XX
```

- Press keys 0 and 8 for the function "Read measured value block" and confirm entry with Q key.

-> Indicated on display:

```
Read measured value block
Input display group number XXX
```

- Press keys 0, 1 and 9 for "Display group number 19" and confirm entry with Q key.

-> Indicated on display:
(1...4 = Display zones)

```
Read measured value block 19
     1     2     3     4
```

- Check display for selector lever (selector lever in P or N) in display zone 2.
  Display: 0
- Operate the footbrake and engage a gear.

  Display in display zone 2 must change to 1.
  Display: 1

- Operate the foot brake and put selector lever in P or N.
- Press the ⇒key.
- Press keys 0 and 6 for the "End output" function and confirm input with the Q key.
- Switch off ignition.

If the specification is not obtained:

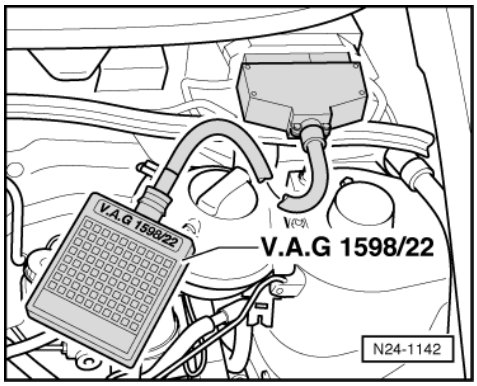

- -> Connect test box V.A.G 1598/22 to control unit wiring harness.
- Connect diode test lamp V.A.G 1527 between test box sockets 1 (terminal 15) + 22 (driving range signal).
- Switch on ignition.
  LED must light up.
- Operate the foot brake and select a driving range.
  LED must go out.

satelettronica

- Switch off ignition.

LED lights up constantly or not at all:

- Check wiring for open circuit or short circuit from test box socket 22 to automatic gearbox using current flow diagram:

=> Current flow diagrams, Electrical fault finding and Fitting locations

5.6 - Checking signal from power steering pressure switch

Special tools, workshop equipment, testers, measuring instruments and auxiliary items required

- Hand multimeter V.A.G 1526 or multimeter V.A.G 1715
- Fault reader V.A.G 1551 (or vehicle system tester V.A.G 1552) with cable V.A.G 1551/3
- Adapter set V.A.G 1594
- Test box V.A.G 1598/22
- Current flow diagram

Test conditions

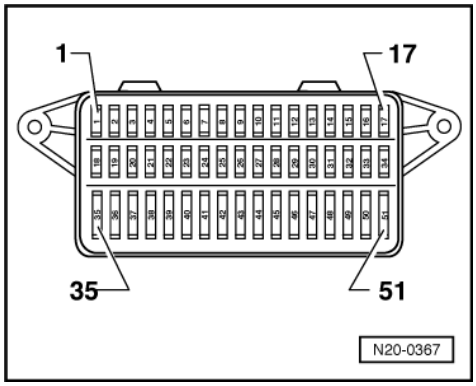

- -> Fuses 13 and 36 must be OK.
- The battery voltage must be at least 11.5 V.
- Earth connection in plenum chamber OK.
- All electrical consumers, e.g. lights and rear window heating must be switched off.
- If the vehicle is equipped with an air conditioner, this must be switched off.

Test sequence

- Connect fault reader V.A.G 1551 (V.A.G 1552). Start engine and select "Address word" 01 of engine control unit. When doing this the engine must be running at idling speed.
  (Connecting fault reader and selecting engine control unit => Page 2 .)

-> Indicated on display:

```
Rapid data transfer      HELP
Select function XX
```

- Press keys 0 and 8 for the function "Read measured value block" and confirm entry with Q key.

-> Indicated on display:

```
Read measured value block
Input display group number XXX
```

- Press keys 0, 1 and 9 for "Display group number 19" and confirm entry with Q key.

-> Indicated on display:

Protected by copyright. Copying for private or commercial purposes, in part or in whole, is not permitted unless authorised by Volkswagen AG. Volkswagen AG does not guarantee or accept any liability with respect to the correctness of information in this document. Copyright by Volkswagen AG.
satelettronica

(1...4 = Display zones)

```
Read measured value block 19
     1     2     3     4
```

- Check operating mode of power assisted steering pressure switch (F88) in display zone 4:

  7th position from left must display 0
  Display: xxxxxx0x
  Significance of 8-digit display in number block
  => Page 35 .

- Turn the steering wheel to full lock.
- Check operating mode of power assisted steering pressure switch (F88) in display zone 4:

  7th position from left must display 1
  Display: xxxxxx1x

- Press the ⇒key.
- Press keys 0 and 6 for the "End output" function and confirm input with the Q key.
- Switch off ignition.

If the display does not change as described:

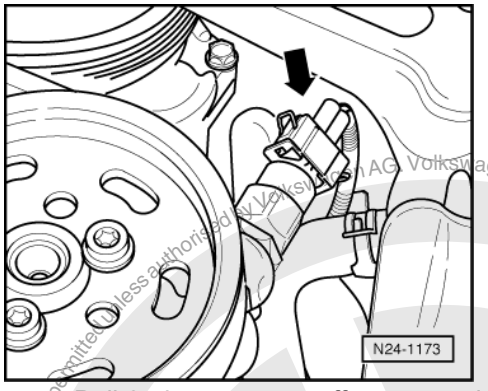

- -> Pull 2-pin connector off power assisted steering pressure switch (F88) -arrow-.
- Connect multimeter to measure resistance at contacts of power assisted steering pressure switch.
- Start engine and run at idling speed.
  Specification: ∞ω (open circuit)
  Turn the steering wheel to full lock.
  Specification: max 1.5 ω (open circuit)
  Switch off ignition.

If the specifications are not obtained:

- Renew power assisted steering pressure switch (F88):

=> Running gear, Axles, Steering; Repair group 48; Vane pump, reservoir, hydraulic pipes Vane pump, reservoir, hydraulic pipes

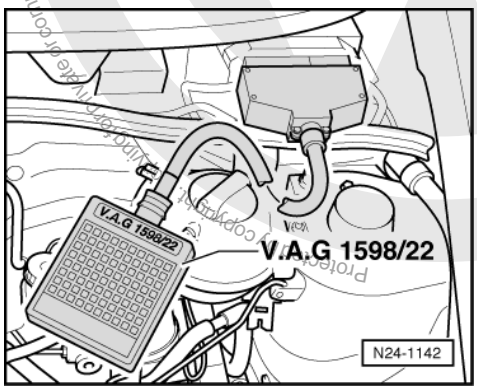

satelettronica

- Interrogate fault memory, if necessary, repair any faults and then erase fault memory => Page 9 , interrogating and erasing fault memory.

If no fault in pressure switch is detected:

- -> Connect test box V.A.G 1598/22 to control unit wiring harness.

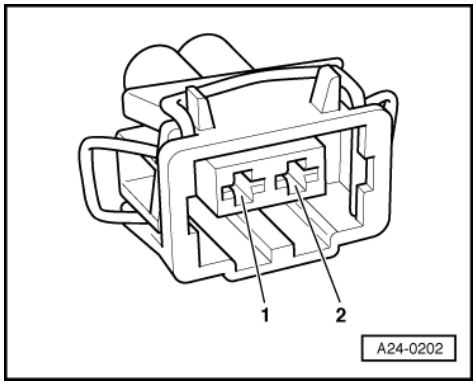

- -> Check wiring for open circuit between test box and 2-pin connector using current flow diagram:
  Contact 1 and test box socket 24
  Contact 2 and test box socket 14
  Wire resistance: max. 1.5 ω
- Additionally check wires for short to one another, to vehicle earth and to battery positive.
  Specification: ∞ω

If no wiring fault is detected:

- Replace engine control unit
  => Page 104 .

5.7 - Checking signal from clutch pedal switch

Special tools, workshop equipment, testers, measuring instruments and auxiliary items required

- Hand multimeter V.A.G 1526 or multimeter V.A.G 1715
- Fault reader V.A.G 1551 (or vehicle system tester V.A.G 1552) with cable V.A.G 1551/3
- Adapter set V.A.G 1594
- Test box V.A.G 1598/22

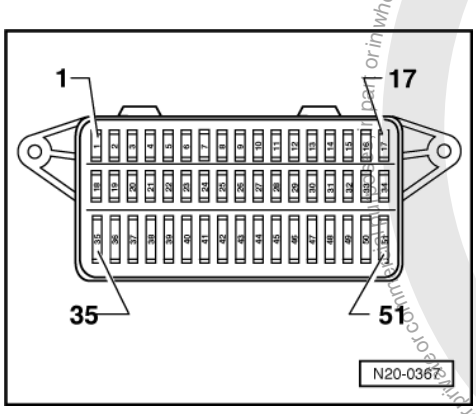

- Current flow diagram

Test conditions

- -> Fuses 24, 31 and 36 must be OK.
- The battery voltage must be at least 11.5 V.
- Earth connection in plenum chamber OK.
- All electrical consumers, e.g. lights and rear window heating must be switched off.

Protected by copyright. Copying for private or commercial purposes, in part or in whole, is not permitted unless authorised by Volkswagen AG. Volkswagen AG does not guarantee or accept any liability with respect to the correctness of information in this document. Copyright by Volkswagen AG.
satelettronica

- If the vehicle is equipped with an air conditioner, this must be switched off.

Test sequence

- Connect fault reader V.A.G 1551 (V.A.G 1552). Start engine and select "Address word" 01 of engine control unit. When doing this the engine must be running at idling speed.
  (Connecting fault reader and selecting engine control unit => Page 2 .)

-> Indicated on display:

```
Rapid data transfer      HELP
Select function XX
```

- Press keys 0 and 8 for the function "Read measured value block" and confirm entry with Q key.

-> Indicated on display:

```
Read measured value block
Input display group number XXX
```

- Press keys 0, 1 and 9 for "Display group number 19" and confirm entry with Q key.

-> Indicated on display:
(1...4 = Display zones)

```
Read measured value block 19
     1     2     3     4
```

- Check operating mode of clutch pedal switch (F36) in display zone 4:

  6th position from left must display 0
  Display: xxxxx0xx
  Significance of 8-digit display in number block
  => Page 35 .

- Fully depress clutch pedal.
- Check operating mode of clutch pedal switch (F36) in display zone 4:

  6th position from left must display 1
  Display: xxxxx1xx

- Press the ⇒ key.
- Press keys 0 and 6 for the "End output" function and confirm input with the Q key.
- Switch off ignition.

If the display does not change as described:

- Remove cover in footwell (driver's side).

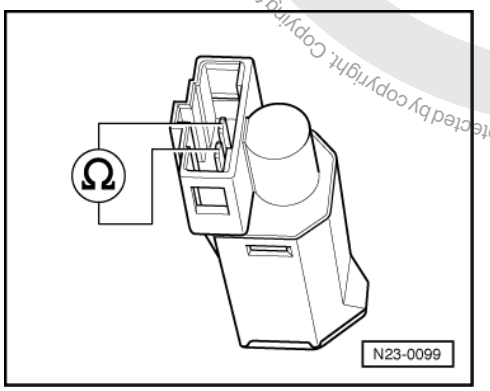

- Pull 2-pin connector off clutch pedal switch.
- -> Connect multimeter to measure resistance at contacts of clutch pedal switch.
  Specification:
  Clutch pedal not depressed: max. 1.5 ω

Protected by copyright. Copying for private or commercial purposes, in part or in whole, is not permitted unless authorised by Volkswagen AG. Volkswagen AG does not guarantee or accept any liability with respect to the correctness of information in this document. Copyright by Volkswagen AG.
satelettronica

Clutch pedal depressed: ∞ω(open circuit)

If the specifications are not obtained:

- Replace clutch pedal switch (F36).
- Interrogate fault memory, if necessary, repair any faults and then erase fault memory => Page 9 , interrogating and erasing fault memory.

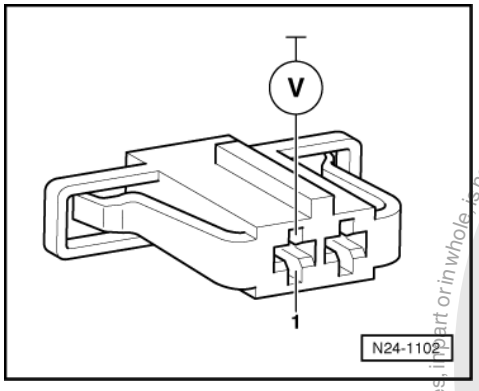

If no fault in clutch pedal switch is detected:

- -> Connect multimeter to measure voltage at contact 1 (connector to engine control unit) + earth.
- Switch on ignition.
  Specification: min. 11.5 V
- Switch off ignition.

If the specification is not attained:

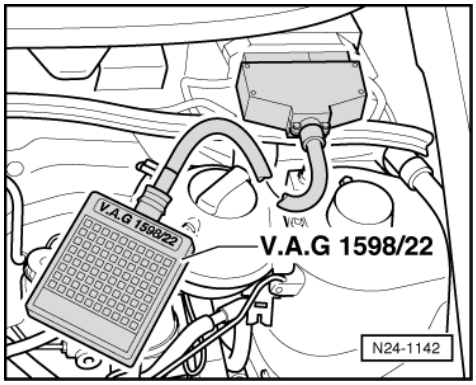

- Check wire for open circuit between 2-pin connector contact 1 and fuse holder referring to current flow diagram.
  Wire resistance: max. 1.5 ω

If the specification is obtained:

- -> Connect test box V.A.G 1598/22 to control unit wiring harness.

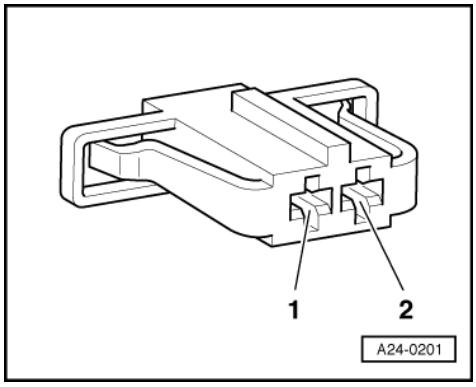

Protected by copyright. Copying for private or commercial purposes, in part or in whole, is not permitted unless authorised by Volkswagen AG. Volkswagen AG does not guarantee or accept any liability with respect to the correctness of information in this document. Copyright by Volkswagen AG.
satelettronica

- Check wiring for open circuit between test box and 2-pin connector using current flow diagram.
  Contact 2 and test box socket 21
  Wire resistance: max. 1.5 ω
- Also check wiring for short to vehicle earth or to battery positive.
  Specification: ∞ω

If no wiring fault is detected:

- Replace engine control unit
  => Page 104 .

Protected by copyright. Copying for private or commercial purposes, in part or in whole, is not permitted unless authorised by Volkswagen AG. Volkswagen AG does not guarantee or accept any liability with respect to the correctness of information in this document. Copyright by Volkswagen AG.

satelettronica

28 - Ignition system

1 - Servicing ignition system

1.1 - Servicing ignition system

1.2 - General notes on ignition system

- Only the components which specifically relate to the ignition system are dealt with here. For the other components of the injection and ignition system => Repair group 24.
- Disconnecting and connecting the battery must only be done with the ignition switched off, otherwise the engine control unit could be damaged.
- The engine control unit is equipped with self diagnosis.
- Components marked with * are checked via the self diagnosis
  => Page 9 , interrogating and erasing fault memory.
- For trouble-free operation of the electrical components a voltage of at least 11.5 V is necessary.
- Before carrying out repairs and for fault finding, interrogate fault memory => Page 9 , interrogating and erasing fault memory
- During some checks it is possible that the control unit will recognise and store a fault. Therefore after completing all checks and repairs the fault memory must be interrogated and if necessary erased.
  => Page 9 , interrogating and erasing fault memory

- If the engine starts, runs for a short period and then stops after fault finding, repairs or component tests, then the fault may lie with the immobilizer which is blocking the engine control unit. The fault memory must be interrogated and if necessary the control unit matched:

=> Electrical system; Repair group 01; Immobilizer self-diagnosis; Adaption following renewal of engine control unit Immobilizer self-diagnosis Adaption following renewal of engine control unit

Safety precautions => Page 127

Test data, spark plugs => Page 128

Protected by copyright. Copying for private or commercial purposes, in part or in whole, is not permitted without the authorisation of Volkswagen AG. Volkswagen AG does not guarantee or assume any liability with respect to the correctness of information in this document. Copyright by Volkswagen AG.
satelettronica

1.3 - Removing and installing parts of the ignition system

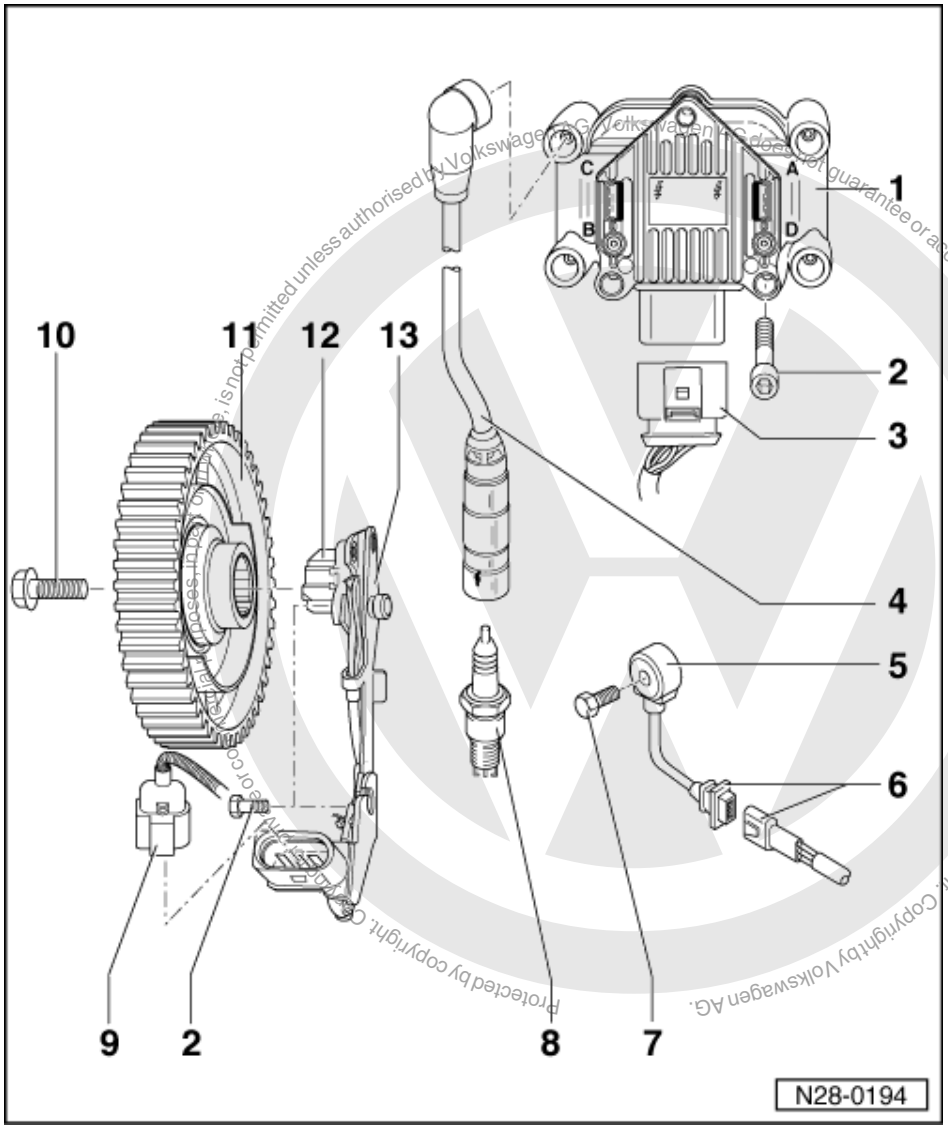

Note:

Engine control unit with connectors => Page 41 , item 16 .*

1 Ignition transformer (N152)
- Fitting location => Page 39 , engine compartment overview
- Marked for H.T. cables:
  A = Cylinder 1
  B = Cylinder 2
  C = Cylinder 3
  D = Cylinder 4
- With output stage (N122)
- Checking => Page 130

2 10 Nm

3 Connector
- Black, 4 pin
- For ignition transformer (N152)

satelettronica

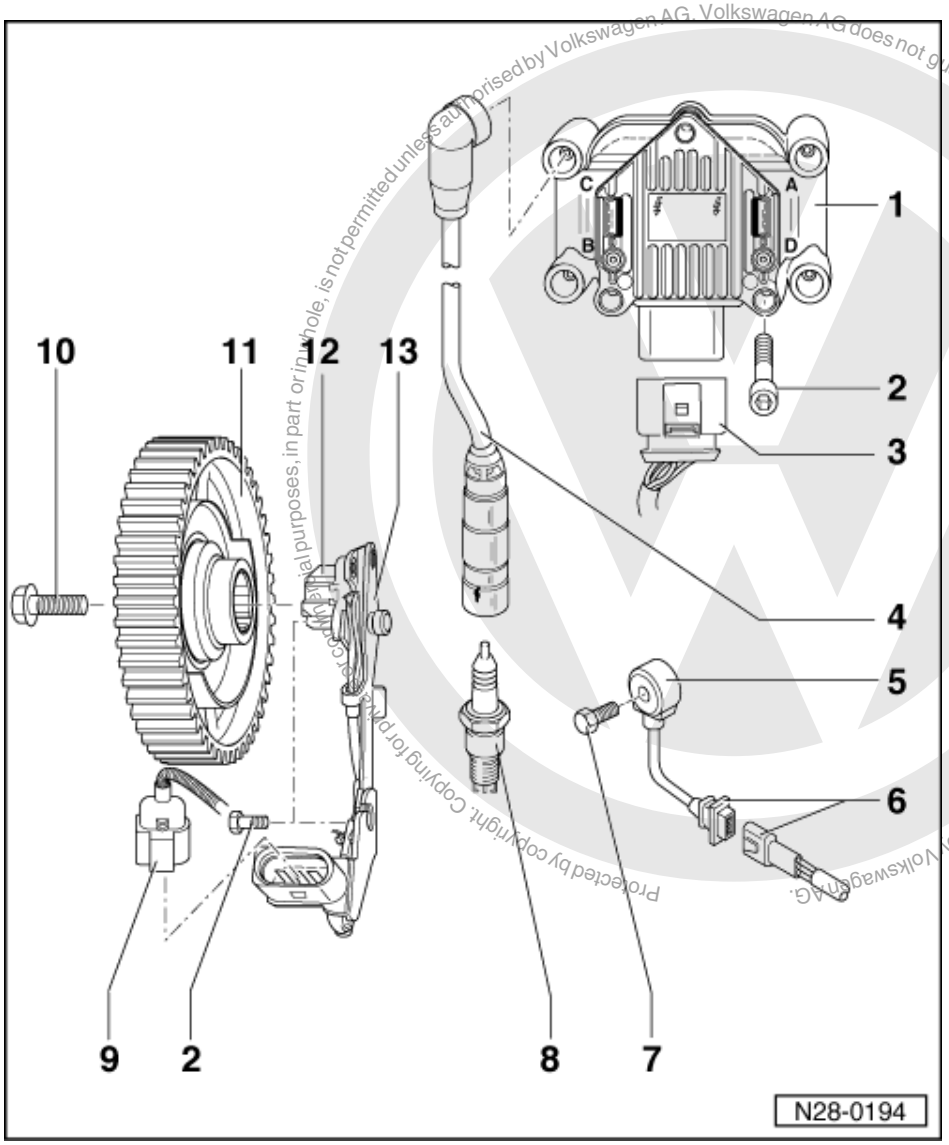

Protected by copyright. Copying for private or commercial purposes, in part or in whole, is not permitted unless authorised by Volkswagen AG. Volkswagen AG does not guarantee or accept any liability with respect to the correctness of information in this document. Copyright by Volkswagen AG.

4 H.T. cable
- Resistance 4.0...8.0 kω
- With suppression connector and spark plug connector
- Pull off spark plug connectors for cylinders 1 and 4 with assembly tool T10029
- Pull off spark plug connectors for cylinders 2 and 3 with spark plug connector pliers V.A.G 1922

5 Knock sensor 1 (G61)*
- Fitting location => Page 39 , engine compartment overview
- Checking => Page 134

6 3 pin connector
- Fitting location => Page 39 , engine compartment overview
- Black

satelettronica

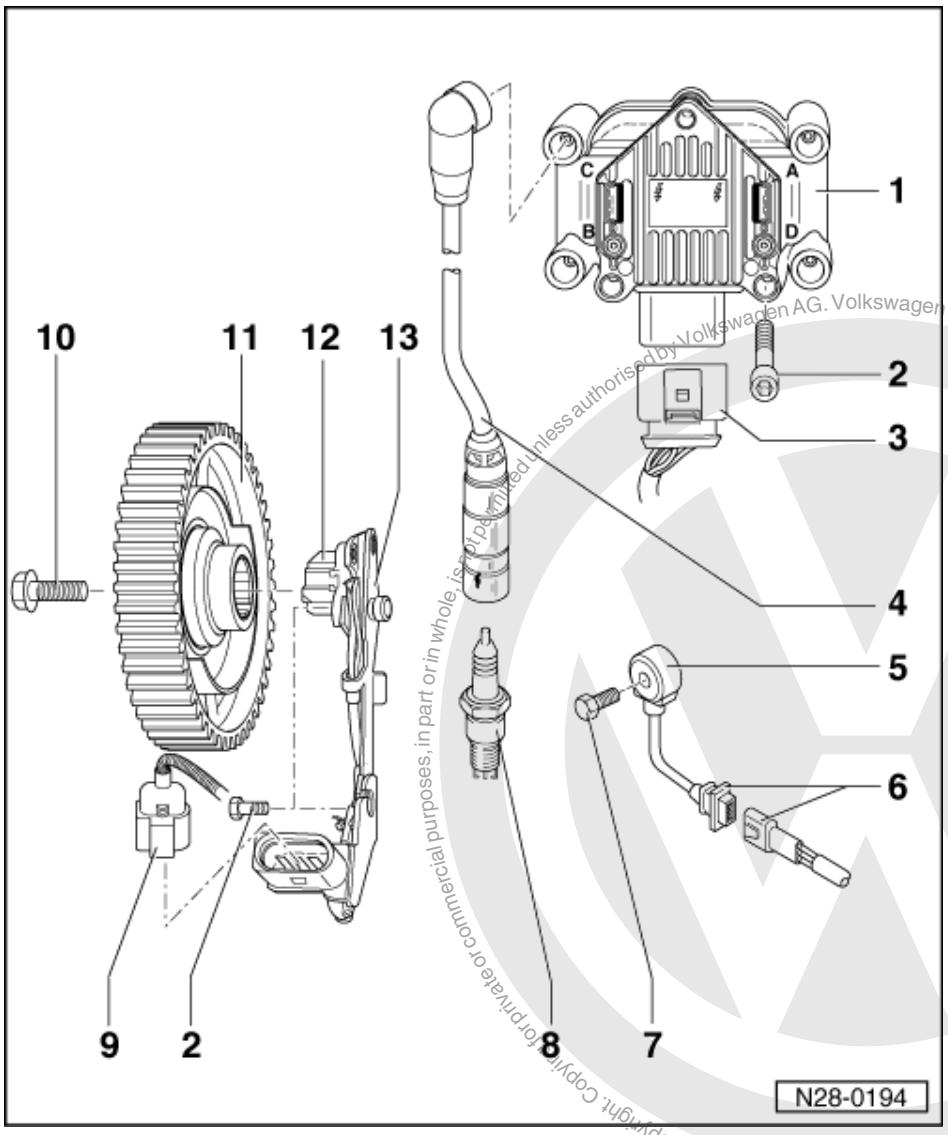

7 20 Nm
- Tightening torque influences the function of the knock sensor

8 Spark plug, 30 Nm
- Type and electrode gap
  => Page 128 , test data, spark plugs
- Remove and install with spark plug spanner 3122B

9 Connector
- Black, 3-pin
- For Hall sender (G40)
- Contacts gold plated

10 100 Nm
- Use counter-hold tool 3415 to loosen and tighten

11 Camshaft sprocket
- With rotor for Hall sender
- Removing and installing:

=> Repair group 15; Servicing valve gear Servicing valve gear

Copyright by Volkswagen AG. Volkswagen AG does not guarantee or accept any liability with respect to the correctness of information in this document. Copyright by Volkswagen AG. Protected by copyright. Copying for private or commercial purposes, in part or in whole, is not permitted unless authorised by Volkswagen AG.
satelettronica

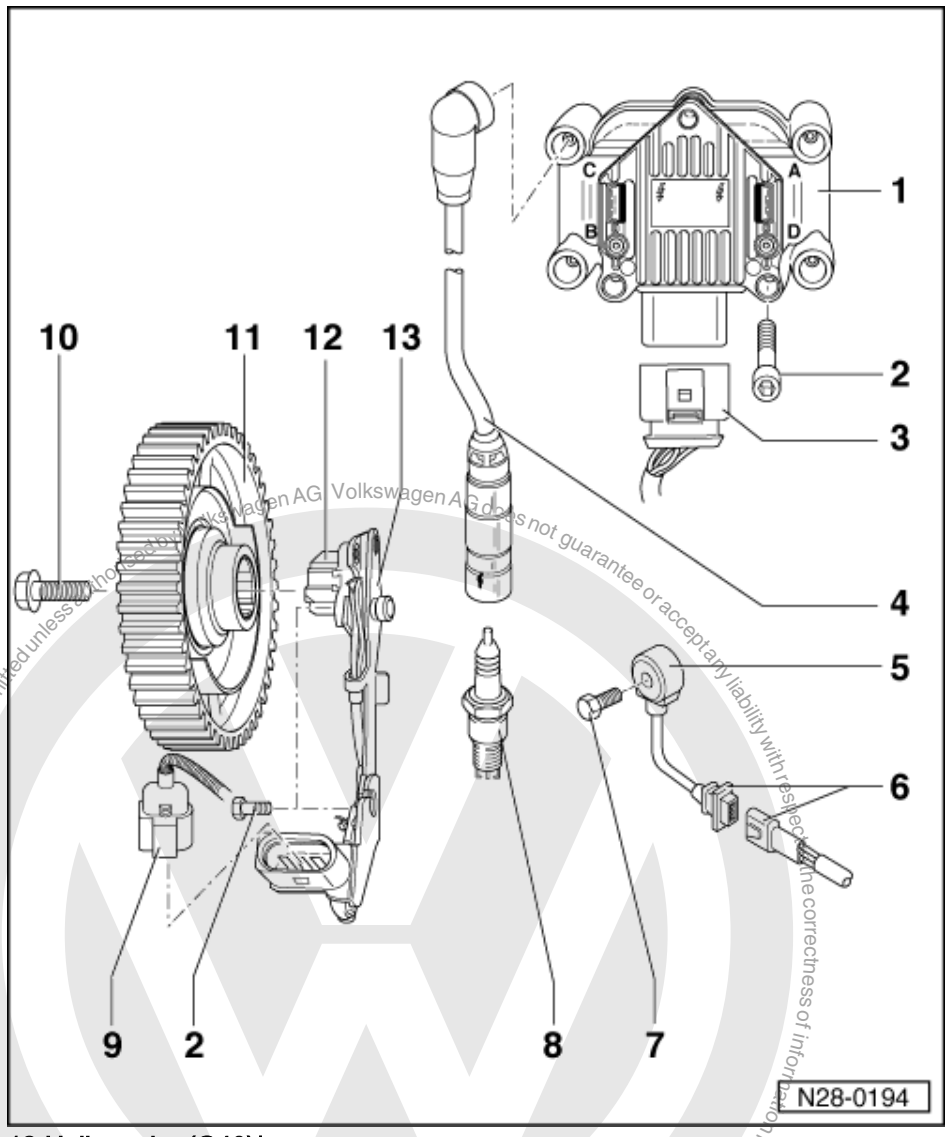

12 Hall sender (G40)*

- Fitting location => Page 39 , engine compartment overview
- Checking => Page 128

13 Bracket

- For Hall sender

Volkswagen AG Volkswagen AG does not guarantee or accept any liability with respect to the correctness of information in this document. Copyright by Volkswagen AG. Protected by copyright. Copying for private or commercial purposes, in part or in whole, is not permitted unless authorised by Volkswagen AG.

1.4 - Safety precautions

To prevent injuries to persons and/or damage to the injection and ignition system, the following must be observed:

- Do not touch or pull off ignition wiring when engine is running or turning at starter speed.
- The ignition must be switched off when disconnecting or connecting injection and ignition system wiring as well as test instrument cables.
- If the engine is to be turned at starter speed, without starting:

satelettronica

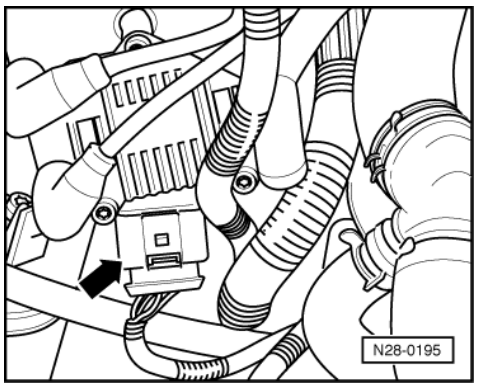

- -> Pull 4 pin connector off ignition transformer (N152) -arrow-.

Observe following if test and measuring instruments are required during a test drive:

- Test and measuring instruments must be secured to rear seat and operated by a 2nd person from this location.

  If test and measuring instruments are operated from front passenger's seat and the vehicle is involved in an accident, there is a possibility that the person sitting in this seat may receive serious injuries when the airbag is triggered.

1.5 - Test data, spark plugs

Engine codes	AEH	AKL
Firing order	1-3-4-2	1-3-4-2
Spark plugs 1)2)		
VW/Audi	101 000 033 AA	101 000 033 AA
Manufacturer's designation	BKUR 6 ET-10	BKUR 6 ET-10
Electrode gap	0.9...1.1 mm	0.9...1.1 mm
Tightening torque	30 Nm	30 Nm

1) For up-to-date specifications also for spark plug change intervals.

=> Exhaust emissions test binder

2) Remove and install spark plugs with plug spanner 3122 B

1.6 - Checking Hall sender

Note:

Only gold contacts may be used for servicing contacts in connector for Hall sender.

Special tools, workshop equipment, testers, measuring instruments and auxiliary items required

- Hand multimeter V.A.G 1526 or multimeter V.A.G 1715
- Adapter set V.A.G 1594
- Test box V.A.G 1598/22
- Current flow diagram

Protected by copyright. Copying for private or commercial purposes, in part or in whole, is not permitted unless authorised by Volkswagen AG. Volkswagen AG does not guarantee or accept any liability with respect to the correctness of information in this document. Copyright by Volkswagen AG.
satelettronica

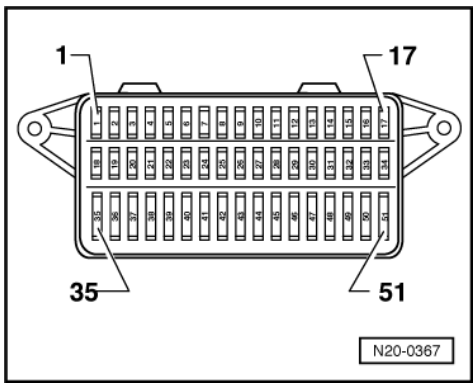

Special tools, workshop equipment, testers, measuring instruments and auxiliary items required

Check conditions

- -> Fuses 13 and 36 must be OK.
- Earth connection in plenum chamber OK.
- The battery voltage must be at least 11.5 V.
- All electrical consumers, e.g. lights and rear window heating must be switched off.

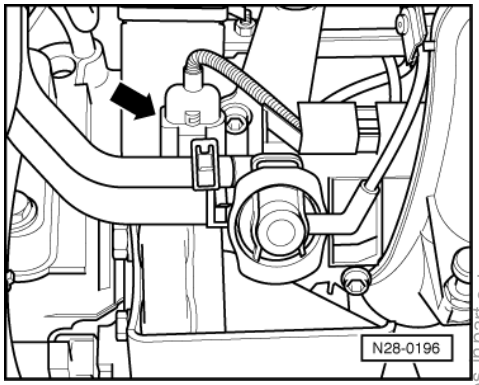

- If the vehicle is equipped with an air conditioner, this must be switched off.
- Self-diagnosis has detected a fault with the Hall sender => Page 9 , Interrogating and erasing fault memory.

Test sequence

- -> Pull 3-pin connector off Hall sender -arrow-.

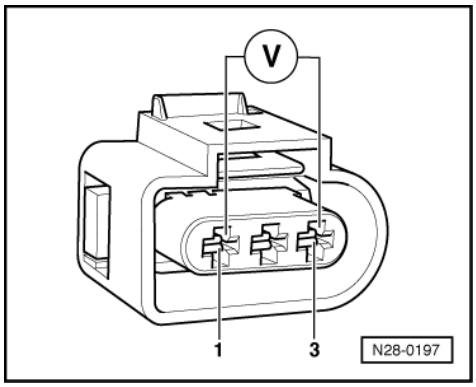

- -> Connect multimeter to measure voltage using aux. cables from V.A.G 1594 to contacts 1 (positive) and 3 (earth) on Hall sender connector.
- Switch on ignition.
  Specification: min. 4.5 V
- Switch off ignition.

Protected by copyright. Copying for private or commercial purposes, in part or in whole, is not permitted unless authorised by Volkswagen AG. Volkswagen AG does not guarantee or accept any liability with respect to the correctness of information in this document. Copyright by Volkswagen AG.
satelitronica

If no voltage is present:

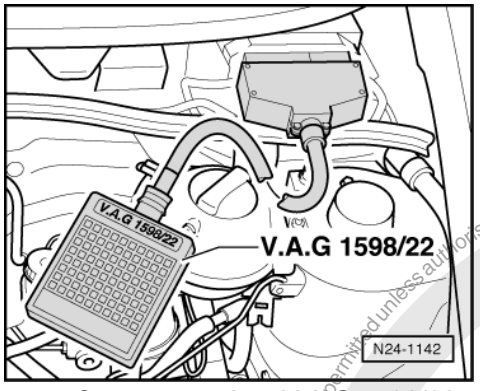

- -> Connect test box V.A.G 1598/22 to control unit wiring harness.

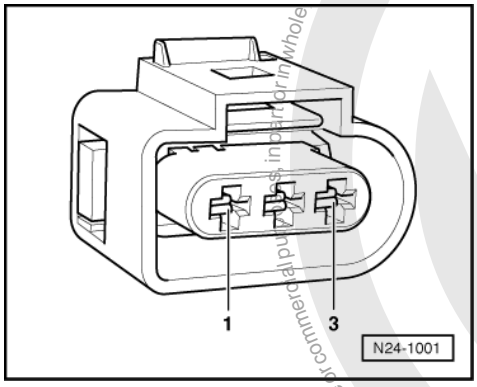

- -> Check wiring for open circuit between test box and 3-pin connector using current flow diagram.
  Contact 1 and test box socket 62
  Contact 2 and test box socket 76
  Contact 3 and test box socket 70
  Wire resistance: max. 1.5 ω
- Additionally check wires for short to one another, to vehicle earth and to battery positive.
  Specification: ∞ω

If no wiring fault is detected and voltage was present between contacts 1 + 3:

- Replace Hall sender (G40)
  =>Page 127 , item 12 .
- Interrogate fault memory, if necessary, repair any faults and then erase fault memory => Page 9 , interrogating and erasing fault memory.

If no wiring fault is detected and voltage was present between contacts 1 + 3:

- Replace engine control unit
  => Page 104 .

1.7 - Checking ignition transformer

Special tools, workshop equipment, testers, measuring instruments and auxiliary items required

- Hand multimeter V.A.G 1526 or multimeter V.A.G 1715
- Diode test lamp V.A.G 1527
- Adapter set V.A.G 1594
- Test box V.A.G 1598/22
- Current flow diagram

Protected by copyright. Copying for private or commercial purposes, in part or in whole, is not permitted unless authorised by Volkswagen AG. Volkswagen AG does not guarantee or accept any liability with respect to the correctness of information in this document. Copyright by Volkswagen AG.
satelettronica

Check conditions

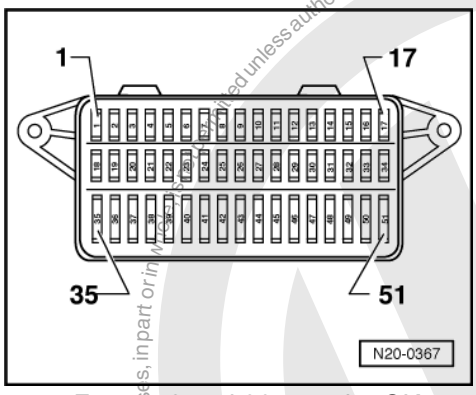

- -> Fuses 13 and 36 must be OK.
- The battery voltage must be at least 11.5 V.
- Earth connection in plenum chamber OK.
- All electrical consumers, e.g. lights and rear window heating must be switched off.
- If the vehicle is equipped with an air conditioner, this must be switched off.
- Engine speed sender must be OK, checking =>Page 81 .

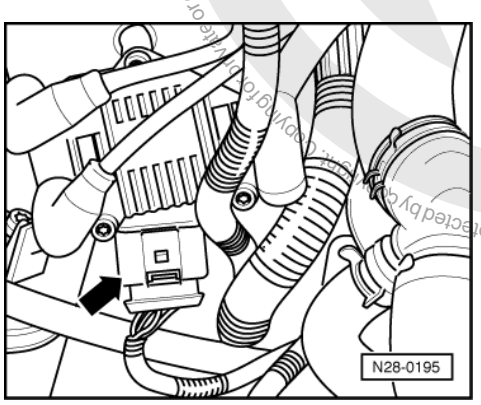

- The Hall sender must be OK, checking => Page 128 .

Test sequence

- -> Pull 4 pin connector off ignition transformer (N152) -arrow-.

Checking voltage supply

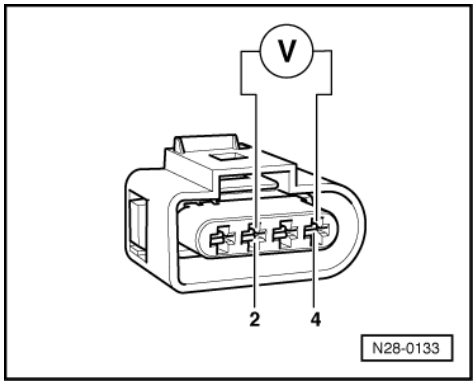

- -> Using multimeter and adapter cables from V.A.G 1594 measure the supply voltage between contacts 2 (positive) + 4 (earth) of disconnected connector.
- Switch on ignition.
  Specification: min. 11.5 V

satelettronica

- Switch off ignition.

If no voltage is present:

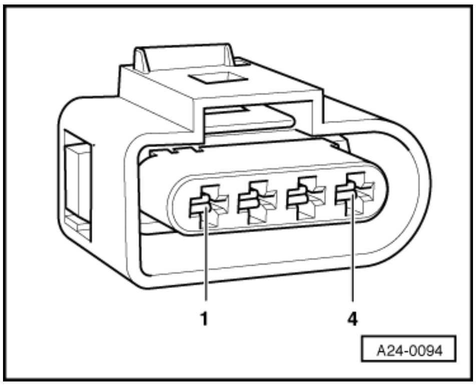

- -> Check wire between 4 pin connector contact 2 and relay plate for open circuit according to current flow diagram.
  Wire resistance: max. 1.5 ω
- Check wire between 4 pin connector contact 4 and earth for open circuit according to current flow diagram.
  Wire resistance: max. 1.5 ω

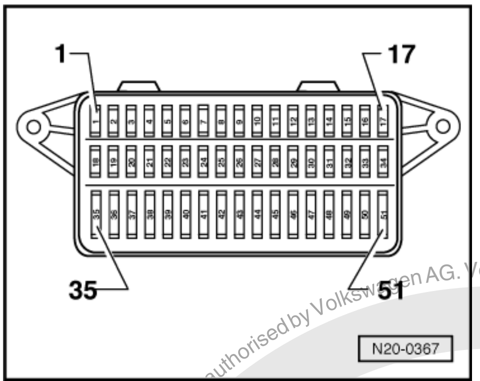

Checking activation

> Warning!
> During the following test do not touch the terminals of the ignition transformer or test cables.

- -> Pull fuel pump fuse No. 40 out of fuse holder.

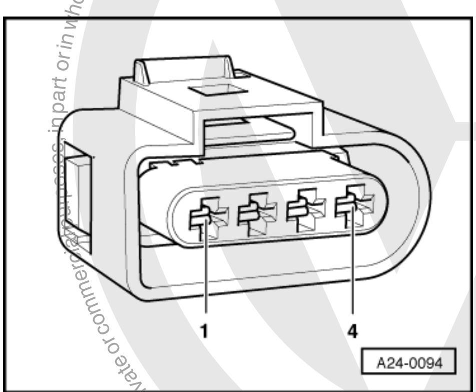

- -> Connect diode test lamp V.A.G 1527 with adapter cables from V.A.G 1594 to
  contacts 1 + 4 (ignition output 1),
  contacts 3 + 4 (ignition output 2)
  of disconnected connector.
- Get a 2nd person to operate starter and check the ignition signal from engine control unit.
  The LED must flicker

Protected by copyright. Copying for private or commercial purposes, in part or in whole, is not permitted unless authorised by Volkswagen AG. Volkswagen AG does not guarantee or accept any liability with respect to the correctness of information in this document. Copyright by Volkswagen AG.

sateletronica

- Switch off ignition.
- Fit fuel pump fuse No. 40 into fuse holder.

If the LED flickers and there is voltage between contacts 2 + 4:

- Replace ignition transformer (N152)
  => Page 124 , item 1 .

Note:

The ignition transformer and output stage are combined in a single component and cannot be renewed separately.

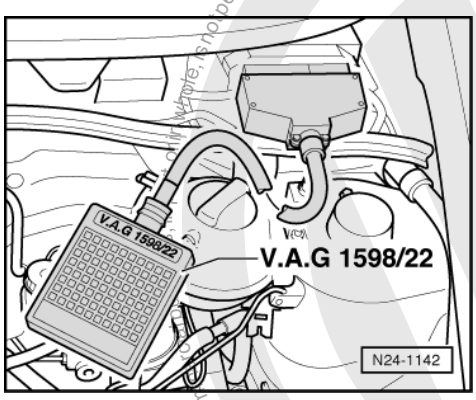

- Interrogate fault memory, if necessary, repair any faults and then erase fault memory => Page 9 , interrogating and erasing fault memory.

The LED does not flicker:

- -> Connect test box V.A.G 1598/22 to control unit wiring harness.

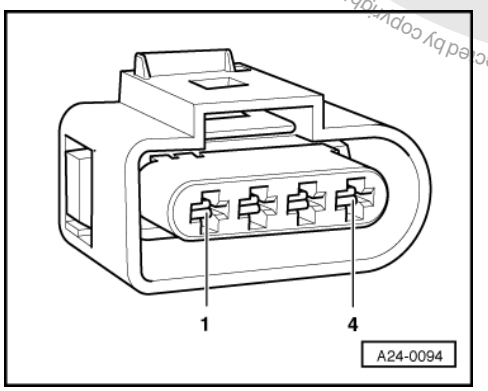

- -> Check wiring for open circuit between test box and 4-pin connector using current flow diagram.
  Contact 1 and test box socket 71
  Contact 3 and test box socket 78
  Wire resistance: max. 1.5 ω
- Additionally check wires for short to one another, to vehicle earth and to battery positive.
  Specification: ∞ω

If no wiring fault is detected and voltage was present between contacts 2+4:

- Replace engine control unit
  => Page 104 .

Protected by copyright. Copying for private or commercial purposes, in part or in whole, is not permitted unless authorised by Volkswagen AG. Volkswagen AG does not guarantee or accept any liability with respect to the correctness of information in this document. Copyright by Volkswagen AG.
satelettronica

Checking secondary resistance

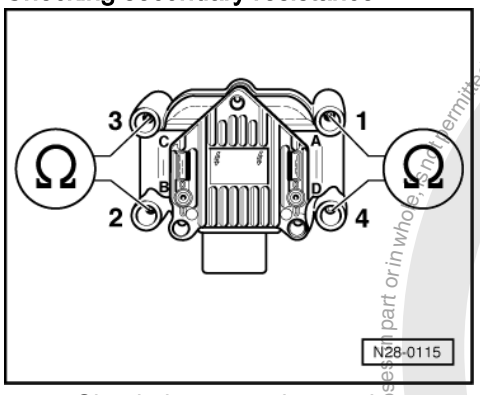

- -> Check the secondary resistance on terminal 4 between
  Cyl. 1+Cyl. 4,
  Cyl. 2+Cyl. 3.
  Specification: 4.0... 6.0 kω (at room temperature)

If the specifications are not attained:
- Replace ignition transformer (N152)
  => Page 124 , item 1 .

Note:
The ignition transformer and output stage are combined in a single component and cannot be renewed separately.
- Interrogate fault memory, if necessary, repair any faults and then erase fault memory => Page 9 , interrogating and erasing fault memory.

1.8 - Checking knock sensor

Notes:
- It is extremely important to keep to the tightening torque of 20 Nm to ensure the knock sensors perform perfectly.
- The knock sensor might misinterpret vibrations of loose components as knocking. Therefore check that engine ancillaries are securely mounted.

Special tools, workshop equipment, testers, measuring instruments and auxiliary items required
- Hand multimeter V.A.G 1526 or multimeter V.A.G 1715
- Adapter set V.A.G 1594
- Test box V.A.G 1598/22
- Current flow diagram

Test conditions
- Self-diagnosis has detected a fault on the knock sensor =>Page 9 , Interrogating and erasing fault memory.

Checking function

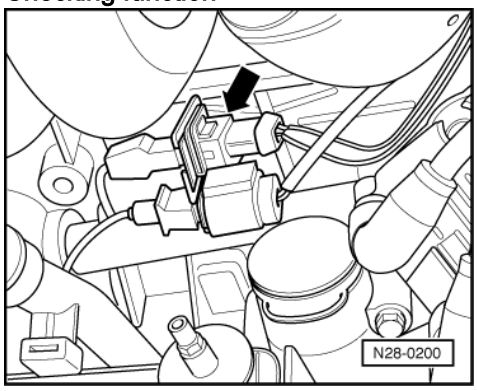

Protected by copyright. Copying for private or commercial purposes, in part or in whole, is not permitted unless authorised by Volkswagen AG. Volkswagen AG does not guarantee or accept any liability with respect to the correctness of information in this document. Copyright by Volkswagen AG.
satelettronica

- Functional check of knock control and knock sensor => Page 21 read measured value block, display groups 14 to 17.

Checking resistance and wiring of knock sensor

- -> Disconnect black 3-pin connector for knock sensor 1 (G61) -arrow-.

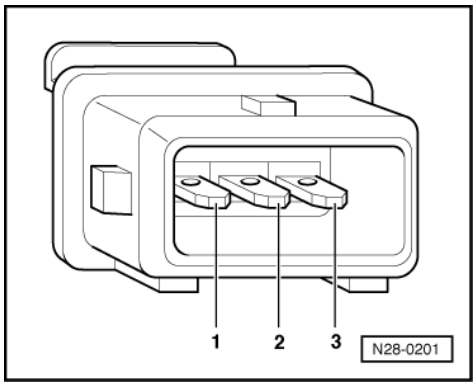

- -> Measure resistance between contacts 1 + 2, 1 + 3 and 2 + 3 of knock sensor connector.
  Specification: ∞ω

If the specification is not obtained:

- Replace knock sensor (G61) =>Page 125 , item 5 .
- Interrogate fault memory, if necessary, repair any faults and then erase fault memory => Page 9 , interrogating and erasing fault memory.

If no fault in knock sensor is detected:

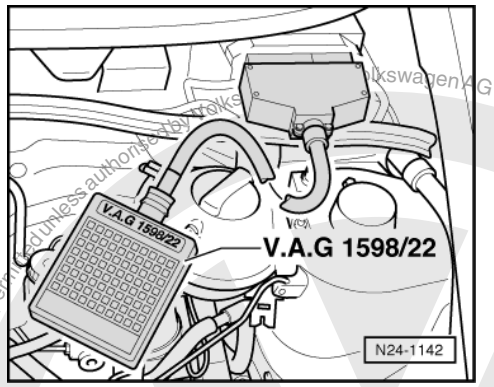

- -> Connect test box V.A.G 1598/22 to control unit wiring harness.

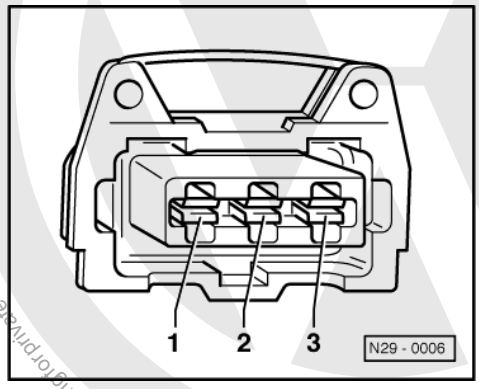

- -> Check wiring for open circuit between test box and 3-pin connector using current flow diagram.
  Contact 1 and test box socket 68
  Contact 2 and test box socket 67
  Contact 3 and test box socket 67
  Wire resistance: max. 1.5 ω

Volkswagen AG does not guarantee or accept any liability with respect to the correctness of information in this document. Copyright by Volkswagen AG. Not for private or commercial purposes, in part or in whole, is not permitted unless authorised by Volkswagen AG.
satelettronica

- Additionally check wires for short to one another, to vehicle earth and to battery positive.
  Specification: ∞ω

If no wiring fault is detected:

- Loosen knock sensor and tighten again to 20 Nm.
- Carry out test drive.

Observe the valid safety precautions when carrying out a test drive => Page 127 .

During the road test the following operating conditions must be fulfilled:
- The coolant temperature must exceed 80 °C .
- When the temperature is reached, the operating conditions
  Idling
  Part throttle
  Full throttle
  Overrun
  must be attained several times.
- At full throttle the speed must exceed 3500 rpm.

- Again interrogate the control unit fault memory.

If the fault is still present:

- Replace knock sensor (G61) =>Page 125 , item 5 .
- Interrogate fault memory, if necessary, repair any faults and then erase fault memory => Page 9 , interrogating and erasing fault memory.

Protected by copyright. Copying for private or commercial purposes, in part or in whole, is not permitted unless authorised by Volkswagen AG. Volkswagen AG does not guarantee or accept any liability with respect to the correctness of information in this document. Copyright by Volkswagen AG.

satelettronica